SYNOPSYS®
Accelerating Innovation

Synopsys and Fujitsu Laboratories

Fujitsu Laboratories Designs Custom DSP for Software-Defined Radio with Synopsys Processor Designer

"Synopsys' reputation as an established provider of custom processor design tools was a key factor in our decision to use Processor Designer for the design of our custom DSP. The robustness of the tool allowed us to focus on meeting our chip design goals rather than software tool chain development."

Makoto Mouri
Research Manager, Fujitsu Laboratories Ltd.

Business

Fujitsu Laboratories is a major subsidiary of Fujitsu Ltd., with the main mission of supporting the Fujitsu's brand promise "shaping tomorrow with you", with leading-edge technologies.

Challenges

- Huge gate count required for multi-mode baseband processing of 3G/LTE communication
- General purpose DSP could not meet performance requirements of LTE wireless standard

Synopsys Solution

- Processor Designer application-specific instruction-set processor (ASIP) design and optimization tool

Benefits

- Easy exploration of DSP architectures with behavior-level simulation
- Complete software development environment in the earliest stages of design, including: Instruction Set Simulator (ISS), Assembler, Linker and Debugger
- Resolved hardware/software specification mismatches
- Achieved 20% reduced power consumption
- LISA language is easy to enhance, modify and reuse for future projects
- Design of custom DSP avoided the royalty costs associated with alternative processor IP cores

Overview

Fujitsu Laboratories recently embarked on the development of an application-specific instruction-set processor (ASIP) for a baseband processor. The ASIP needed to perform DSP functions for a 3G/LTE multi-mode wireless base band system used in smartphone and tablet PC products. Fujitsu Laboratories had several aggressive design goals for their new custom processor:

- Reduce the total gate count of their multi-mode baseband system;
- Achieve the highest possible LTE performance; and
- Meet their low power consumption target while maintaining a tight project schedule.

To support these goals, Fujitsu Laboratories required a proven solution that would minimize the effort required to create its own DSP and associated development tools so that the design team could focus on meeting the chip-level design requirements. Synopsys' Processor Designer

provided the development tools and automated design methodology to achieve the quality of results expected by the Fujitsu Laboratories design team.

Power and Performance

Fujitsu Laboratories knew that neither an existing DSP nor creating a DSP design from scratch were practical approaches to their project given their aggressive project schedule. Fujitsu Laboratories was aware of Processor Designer's proven track record of enabling custom processors to be designed efficiently, including the generation of the software tool chain. Processor Designer simplifies the creation of custom processors by providing one formal input specification for ISS, software tools (assembler, linker, debugger and compiler) and RTL implementation model. The unique ASIP implementation flow enables designers to achieve the optimal balance of performance, area and power for their specific application. Fujitsu Laboratories' 28-nanometer DSP design consumed 20 percent less power than standard DSP alternatives while meeting the performance goal of 12 GOPS (12 billion operations per second) at 250 MHz. A key design element in achieving reduced power consumption of Fujitsu Laboratories' custom SDR DSP is the vector engine unit created with Processor Designer. Not only did Processor Designer help Fujitsu Laboratories achieve their DSP performance and power goals, Synopsys' solution was easily integrated into Fujitsu Laboratories' existing environment where the generated RTL could be validated on their FPGA prototype.

Expert and Responsive Support

The quality of tools and methodology were just as important as a reliable partner to Fujitsu Laboratories. The hands-on cooperation of the local Synopsys support and R&D teams were integral to the success of Fujitsu Laboratories' custom DSP project. Synopsys proactively and aggressively supported Fujitsu Laboratories' tight development schedule, providing access to support resources that helped them meet their project goals.

"Synopsys' reputation as an established provider of custom processor design tools was a key factor in our decision to use Processor Designer for the design of our custom DSP," said Makoto Mouri, research manager at Fujitsu Laboratories Ltd. "The robustness of the tool allowed us to focus on meeting our chip-level design goals rather than software tool chain development."

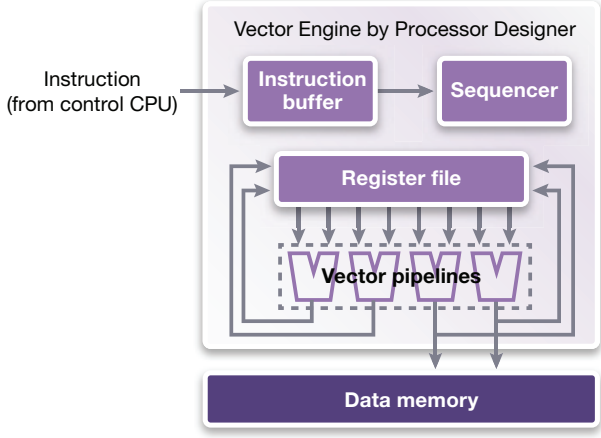

Figure 1: Vector engine for Fujitsu Laboratories' Software-Defined Radio custom DSP

Synopsys, Inc. • 700 East Middlefield Road • Mountain View, CA 94043 • www.synopsys.com

07/13.AP.CS3207.