SAE TECHNICAL
PAPER SERIES

2007-01-1592

Modeling and Simulation of Hybrid Electric Vehicle Power Systems

Min Zhang
Synopsys Inc

Reprinted From: Automotive Electronics and Systems Reliability (SP-2088)

ISBN 0-7680-1633-9

9 780768 016338

**2007 World Congress
Detroit, Michigan
April 16-19, 2007**

SAE International™

400 Commonwealth Drive, Warrendale, PA 15096-0001 U.S.A. Tel: (724) 776-4841 Fax: (724) 776-0790 Web: www.sae.org

By mandate of the Engineering Meetings Board, this paper has been approved for SAE publication upon completion of a peer review process by a minimum of three (3) industry experts under the supervision of the session organizer.

All rights reserved. No part of this publication may be reproduced, stored in a retrieval system, or transmitted, in any form or by any means, electronic, mechanical, photocopying, recording, or otherwise, without the prior written permission of SAE.

For permission and licensing requests contact:

SAE Permissions
400 Commonwealth Drive
Warrendale, PA 15096-0001-USA
Email: permissions@sae.org
Fax: 724-776-3036
Tel: 724-772-4028

Global Mobility Database®

All SAE papers, standards, and selected books are abstracted and indexed in the Global Mobility Database.

For multiple print copies contact:

SAE Customer Service
Tel: 877-606-7323 (inside USA and Canada)
Tel: 724-776-4970 (outside USA)
Fax: 724-776-0790
Email: CustomerService@sae.org

ISSN 0148-7191
Copyright © 2007 SAE International
Positions and opinions advanced in this paper are those of the author(s) and not necessarily those of SAE. The author is solely responsible for the content of the paper. A process is available by which discussions will be printed with the paper if it is published in SAE Transactions.

Persons wishing to submit papers to be considered for presentation or publication by SAE should send the manuscript or a 300 word abstract of a proposed manuscript to: Secretary, Engineering Meetings Board, SAE.

Printed in USA

2007-01-1592

Modeling and Simulation of Hybrid Electric Vehicle Power Systems

Min Zhang
Synopsys Inc.

Copyright © 2007 SAE International

ABSTRACT

Using a top-down design methodology, two levels of hybrid electric vehicle power system are presented in the paper. At the highest abstraction level, a behavior modeling method is used to develop models for 3-phase AC/DC converter and brushless DC motor controller, which reduce the simulation time without compromise of accuracy. At the second level of design, six diodes along with delta-delta and delta-wye transformer are used to simulate the 3-phase, 12-Pulse rectifier. Six switches are used as power devices to simulate the PWM motor controller. DC outputs at different load conditions, motor speed, under-voltage protection, over-current protection as well as input current THD (Total Harmonic Distortion) are simulated using Saber's Virtual Prototyping solution. The results of two abstraction levels match well and both of them meet the specifications of the design.

INTRODUCTION

Due to the advantages of high energy efficiency and low environmental pollution, the hybrid electric vehicle gets a lot of attention in the automobile industry recently[1]. Compared to the traditional car, the hybrid electric vehicle employs much more electronics technologies, the interactions between the electrical system and mechanical system becomes more frequent. The overall system is much more complicate and it presents a great challenge to the automobile design engineer: how to simulate such a complicate mixed system to increase the reliability and robustness prior to the physical design? As we know, most difficulties encountered during simulation of a complex system are: 1) the amount of simulation time is unacceptable. With an increase of system complexity, especially for the power switching system, the time step of transient simulation is determined by the switching frequency, it takes hours for a simulator to simulate the start up behavior of a switching power system. 2) Convergence problems. It is much more difficult for the simulator to find the solution when the system gets more complicated. In addition, all the models may not work very well with each other when system gets more complicated. With the flexibility of advanced modeling languages (MAST, VHDL-AMS) and top –down design methodology, designers could simplify the system at different abstraction levels by focusing on different interested characteristics. Then the simulation speed can be improved by 30 times without losing the accuracy of overall system behavior. In this paper, two levels of a hybrid vehicle power system are used as examples to illustrate how to use a top-down methodology and average modeling technique to simplify the design for simulation. At the first level, the average modeling technique is used to develop two key components in the system: 3-phase, 12-pulse AC/DC converter and PWM brushless DC motor controller. With this level of abstraction, only input and output characteristics can be simulated, however it can complete the whole system simulation in just one minute. At the second level, ideal linear transformers and switches are used to construct the 3-phase, 12-pulse AC/DC converter and PWM brushless DC motor controller. With this level of abstraction, the diode rectifier, phase shift of 12-pulse transformer, and PWM switching control can be simulated. The other behaviors, such as over-current protection, under-voltage protection, DC output, motor speed control and electrical commutation are simulated with two different levels of the AC/DC converter and PWM controller. All of these behaviors of two different levels match very well.

DESIGN METHODOLOGY

SYSTEM SPECIFICATIONS

A typical hybrid vehicle system is shown in figure 1. It consists of an ICE engine, a three-phase generator, a rechargeable battery, an electrical control unit, a 3-phase 12-pulse AC/DC converters, a brushless DC motor, a PWM motor controller or inverter, a power split device and mechanical loads.

The ICE engine is directly connected to the carrier of the planetary gear, which spit the mechanical power to the generator through the sun gear and to the wheel through the ring gear. The generator generates three phase AC voltage which is fed to the AC/DC converter. The ECU is the brain of the hybrid vehicle which controls the HEV working in different modes of operation. It also has the

over-current and under-voltage protection. The 12-pulse, 3-phase AC/DC transformer/rectifier converts this 230V AC to 270V DC output. Part of the DC power is used to charge the battery when it is needed. Another part of the DC power goes to the brushless DC motor which drives the wheel. The PWM, six-step, 120 degree trapezoidal brushless DC motor controller is used synchronize the magnetic field with rotor position. It is also used to control the motor output speed or torque. The battery provides the power at the lower speeds or assists the engine during sudden acceleration. The brushless DC motor provides the power to the wheel in most of operational modes. However, it also acts as a generator during deceleration or braking, which recovers the kinetic energy as electrical energy to charge the battery. The specifications for each part are shown in table 1[2] [3].

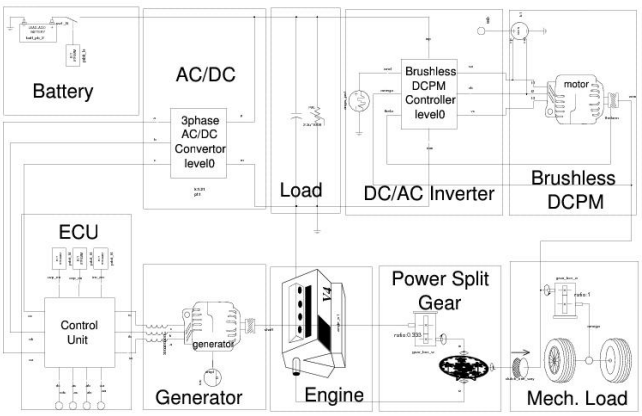

Figure 1 Virtual Hybrid Vehicle System

Table 1 – Design Specifications

Unit	Specification	Value
Three Phases Generator	Output Voltage	230 RMS
	Shaft speed	6000-12000 RPM
	THD	<10%(Full load)
	Power	30 KW
Battery	Output Voltage	270 V
	Capacity	6.5 Ah
	Power	20 KW
Three AC/DC Converter	Input AC Voltage	230 V (RMS)
	Output DC Voltage	270 V (30KW) 270-5% (35KW)
Brushless DC Motor Controller	type	6-step, 120 degree, trapezoidal driver
	Input DC Voltage	270 V
	Poles	8
Brushless DC Motor	Efficiency	>90%
	Steady Speed	1200 RPM
	Max. Power	50 KW
Electric Control Unit	Over Current Protection	>95 A(Input current)
	Under Voltage Protection	<240 V(DC voltage)

THREE PHASE AC GENERATOR

Although there are a lot of different three phase generator models available, most of them take the detailed physics into account. In addition, a complicated control box is needed to drive them. It takes tens of minutes to simulate just 1 or 2 millisecond with these physics based generator models. However, in this application, the most important characteristics for the generator are that the output frequency is determined by the input shaft speed and the amplitude of the output can be controlled. This then allows the generator to be simply modeled by a controllable three phase source, with its output frequency equal to product of input shaft frequency and the number of poles.

The most important thing for the generator is that the maximum output power is 30KW. From the specification, we know the input shaft speed is from 6000-10000 rpm, poles number is 4, so the output AC frequency is about 400-670Hz. The peak phase amplitude is 325.22V. The internal resistance can be calculated by the power specification. From the specification, the nominal power is 30KW when DC output is 270V; maximal power is 35KW when DC output drops 5% of its nominal output. With these two specifications, four approximation equations can be obtained:

$$V_{peak} \times I_{peak_nom} = P_{nom} / 3.0 \times 2 + I_{peak_nrm} \times I_{peak_nom} \times R_{in}$$

$$V_{peak} \times I_{peak_\max} = P_{\max} / 3.0 \times 2 + I_{peak_\max} \times I_{peak_\max} \times R_{in}$$

$$(V_{peak} - I_{peak_nom} \times R_{in}) \times K / \sqrt{3} = 270$$

$$(V_{peak} - I_{peak_\max} \times R_{in}) \times K / \sqrt{3} = 256$$

Where K is the ratio between DC output and line input voltage of the converter. Solving these four equations simultaneously, the distributed internal resistance is 0.68 ohms. K is about 0.581.

ELECTRICAL CONTROL UNIT

All control algorithms for the hybrid electrical vehicle are implemented in the ECU. In this example, only the over-current protection and under-voltage protection units are simulated.

Over-current protection

The line current increases when either the input voltage increases or the load increases. The worst case is that there is a short circuit failure in the AC/DC converter. The huge current will easily burn out the generator. To protect the generator, an over-current protection is necessary. In this unit, the small transformer, comparator, and reference voltage are used to detect the event where the line current crosses 95 Amp. Because the current is an AC current, a D latch is used to lock the output logic once the line current crosses the presetting value. The other logic gates (AND, INV and BUFFER) are used to design a bypass logic function.

With this function, this unit can be disabled by forcing enable=logic_0. The logic equation for the bypass function is:

$$out = \overline{enable} + \overline{(\overline{in} + \overline{enable})}$$

The circuit for the over-current protection is shown in figure 2.

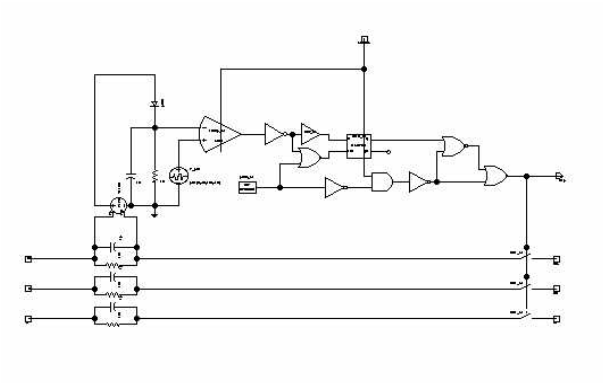

Figure 2 Over-current Protection

Under-voltage protection

If there is a short circuit failure in the brushless DC motor driver, it will pull down the DC output voltage significantly and pose a great danger to the passenger [4]. This is because, a huge back EMF will be induced in the shorted winding by the fast spinning rotor, the back EMF generates a big current in the shorted winding, thus a large torque is generated on the rotor. This large torque tends to block the vehicle and makes the vehicle uncontrollable. This cannot be simply avoided by disconnecting the brushless DC motor driver because the opened winding also presents a great risk of high voltage to the rescuer or passenger. In this example, the under-voltage protection is used to detect this kind of failure. When the DC voltage drops below a certain value the under-voltage protection circuit will be triggered on, and it will detach the motor from the wheel, and keep the car still in the control. It also will disconnect the load from the power supply to protect the generator and battery. The circuit is shown in figure 3.

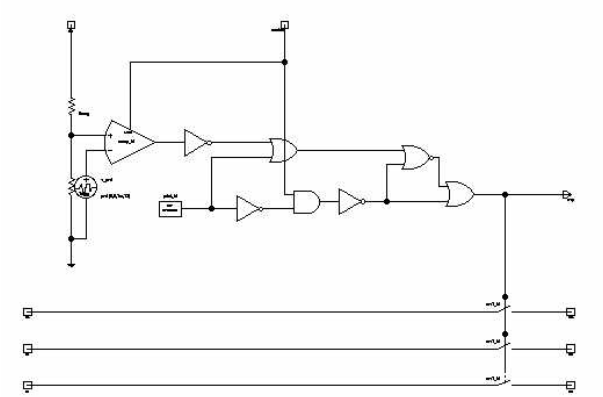

Figure 3 Under-voltage Protection

The initial value of the comparator output should be set to l4_0 at the beginning of simulation. The reason for this is that, before the system reaches its steady state, the dc voltage is always below 270. If there is no initial value on the comparator's output, the under-voltage protection is always active and the DC output can never reach 270V.

THREE PHASE, TWELVE PULSE AC/DC CONVERTER

The AC/DC converter is one of the most important components in this application. Two different levels of models will be used here. The conventional 12-pulse rectifier consists of a delta-wye and a delta-delta transformer with two six-diode rectifier bridges. The advantages of the multiple pulses AC/DC converter are reduction in the AC input line current harmonics and dc output voltage ripple. Also the diode bridge is much more robust than the modern power devices, such as power MOS and IGBT, which usually operate in a very high switching frequency to regulate the DC output[8].

Average AC/DC converter model (level 0)

At the first level, the AC/DC converter only performs AC to DC conversion with energy conservation. No phase shift of transformer and rectify of the diode bridge will be taken into account.

As we know, the classic Clarke transform converts a three phase AC input into two orthogonal AC outputs. The sum of these two vectors is proportion to the amplitude of the AC input. Ignoring voltage drop on the diodes, the DC output is approximately proportion to the amplitude of the AC input. Thus DC output can be obtained by the Clarke transform:

$$V_\alpha = V_A$$

$$V_\beta = (V_A + 2 \times V_B) / \sqrt{3}$$

$$V_{DC} = K \times \sqrt{V_\alpha{}^2 + V_\beta{}^2}$$

where K is the ratio between DC output voltage and phase input voltage. From energy conservation law, then the phase input current is:

$$I_{ampl} = \frac{V_{DC} \times I_{DC} \times 2}{3 \times V_{ampl} \times eff \times pf}$$

Taking power factor into account, the two orthogonal components for input current should be:

$$\alpha = \sin(wt + \phi) = \sin wt \times \sin\phi + \cos wt \times \cos\phi$$

$$\beta = \cos(wt + \phi) = \sin wt \times \cos\phi - \cos wt \times \sin\phi$$

Apply the inverse Clarke transform on current, the three input phase currents are:

$$I_A = I_{ampl} \times \alpha$$

$$I_B = I_{ampl} \times (-\alpha + \sqrt{3} \times \beta) / 2$$

$$I_C = I_{ampl} \times (-\alpha - \sqrt{3} \times \beta) / 2$$

The K, eff and pf are three parameters for the average three phase AC/DC converter model. In the top level, assuming the efficiency is 100% and power factor is 1,

the K can be derived during the calculation of the internal resistor for the generator (K=0.581).

Ideal AC/DC converter model (level 1)

In order to get the detail behaviors of the 3-phase, 12-pulse AC/DC converter, a deep level of AC/DC model is needed. At the second level of abstraction, an ideal linear delta-wye transformer, a delta-delta transformer, and two bridges are used to simulate the real 3-phase, 12-pulse AC/DC converter, as shown in figure 4. The capacitor s is used to model the junction capacitance. As previously stated in the average model, the K is 0.581, which results in the winding ratio of 0.29 for delta-delta transformer and 0.17 for delta-wye transformer respectively.

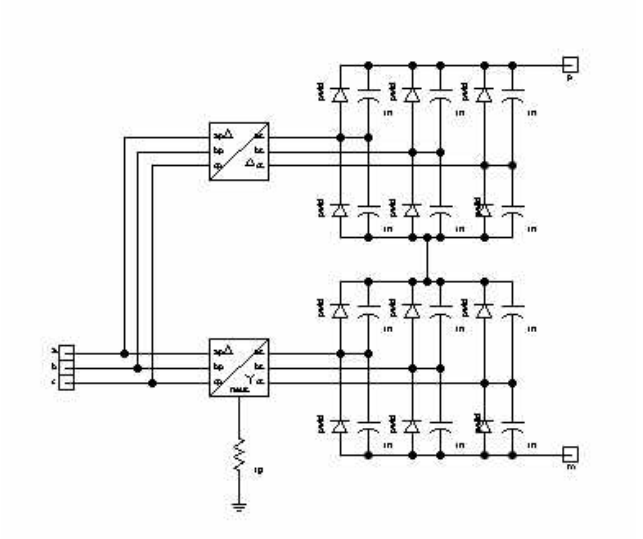

Figure 4 3-phase, 12-pulse AC/DC Converter

The DC output voltage of the ideal AC/DC converter is smaller than that of the average model, as seen during the simulation. This is because the voltage drop on the diodes is ignored in the average model.

BRUSHLESS DC MOTOR (BLDC)

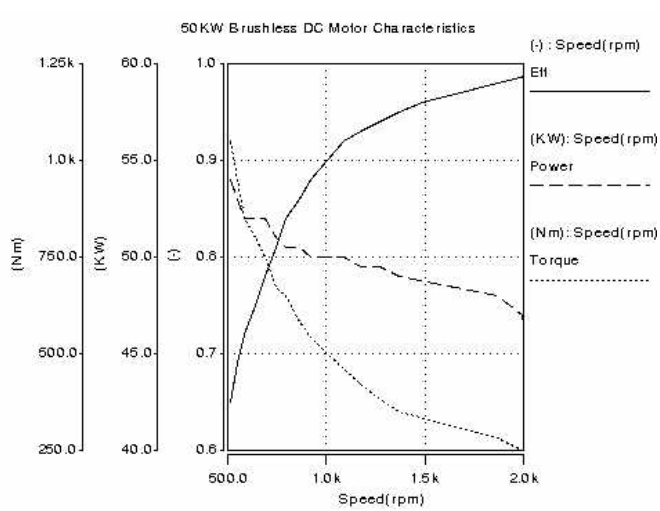

Figure 5 Brushless DC Motor Characteristics

The absence of the brushes and mechanical commutators makes the BLDC more robust and reliable. The use of permanent magnets for the excitation makes BLDC the most efficient of all electric motors. These prominent advantages are quite attractive to the application of HEV[4]. In this application, as shown in specification, the nominal DC voltage of brushless DC motor is 270V, rotational speed is 1200RPM, mechanical output power is 50KW, and efficiency is more than 90%. The characteristics of a characterized brushless DC motor based on the above specification are shown in figure 5. The winding resistance is 0.01 ohm, winding inductance is 0.5mH, back-emf constant is 0.95, and pole number is 8.

BRUSHLESS DC CONTROLLER

A traditional brushless DC motor is controlled by a three phase inverter, which requires the rotor position for providing the proper commutation sequence to control the inverter. In order to control the motor speed, a PWM controller is also needed to regulate the output voltage, and thus the motor speed. Because the PWM controller works at very high frequency, it limits the time-step of the simulator to the period of the switching and slows down the simulation speed significantly, even when nothing happens during the simulation.

Average PWM brushless DC motor controller (level 0)

In order to simulate the PWM controller without simulating the high frequency switching, an average model is needed. In the average controller model, output DC voltage of the controller is assumed to be the product of the input voltage and the duty cycle.

$$V_{dc_average} = V_{in} \times D_{duty}$$

With this assumption, the simulation speed can be improved by one order of magnitude.

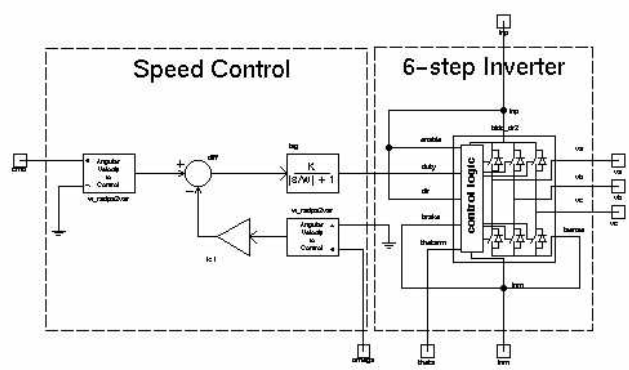

Figure 6 Brushless DC Motor Controller (level 0)

The controller also needs to produce the appropriate commutation sequence to energize the proper winding, and keep the magnetic field generated by the input on static windings synchronized with the field on the rotor. The correct commutating sequence cycle for forward direction is: (s6,s1) -> (s1,s2) -> (s2,s3) -> (s3,s4) -> (s4,s5) -> (s5,s6) -> (s6,s1). Each switch is turned on for

120 degree, and at each step, there are always two switches turned on simultaneously: one is on the upper arm and another one is on the lower arm. Because of the average PWM model, all the switches only work at the commutation frequency 80Hz, which is much lower than the actual PWM switching frequency 20KHz, thus it can improve the simulation speed significantly. This controller can be also used to control the output torque of the brushless DC motor if the feedback signal is the torque. The circuit for the average control model is shown in figure 6.

Ideal PWM brushless DC motor controller (level 1)

To verify the more detailed switching behavior of the PWM controller, an ideal PWM brushless DC motor controller is developed. An electrical commutator, ideal switches, and other digital models are used to create a real PWM controller, as shown in figure 7.

The PWM control is performed on the upper arm switches[7]. Because of that, the neutral point of the brushless dc motor can be measured during the time when the PWM are off. The number of poles is 8, which must be the same as the brushless DC motor. Based on the specification, the nominal rotational speed of the motor is 1200RPM, making the turn-on time of each switch in one round to be about 0.004 second. The PWM frequency is 20KHz, with about 80 PWM pulses during the turned-on state of power switches.

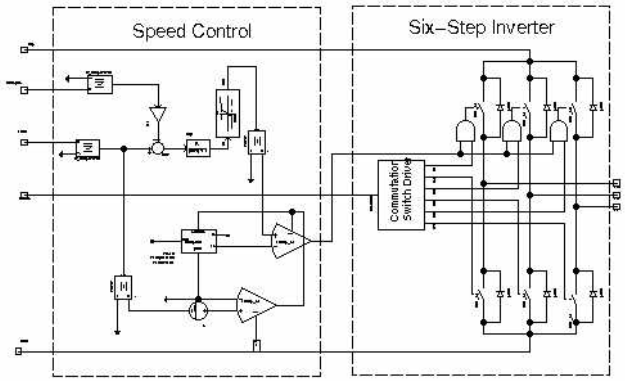

Figure 7 Brushless DC Motor Controller (level 1)

SIMULATION RESULTS

DC OUTPUT RESULTS AT DIFFERENT LOAD POWER (25KW,30KW,35KW)

During time period 0 to 0.5 second, we only simulate the generator and AC/DC converter behaviors, thus the motor is turned off and this improves the simulation time. The electric load resistor varies from 2.92 ohm to 2.43 ohm at time 0.3 second, from 2.43 ohm to 1.87 ohm at time 0.4 second. The total consumed power by them is 25KW, 30KW and 35KW, the DC output voltage is about 278.66.4V, 270.2V and 255.7V, respectively. With the second level of AC/DC converter model, the DC output voltage is 282.7V, 273.4V and 257.5V when the load power is 25KW, 30KW and 35KW, respectively. The DC output voltage of the first level AC/DC converter is about 2-5V smaller than those of the second level model. This is because in first level the voltage drops on the bridge diodes are ignored. The output DC voltages at different load power are shown in figure 8.

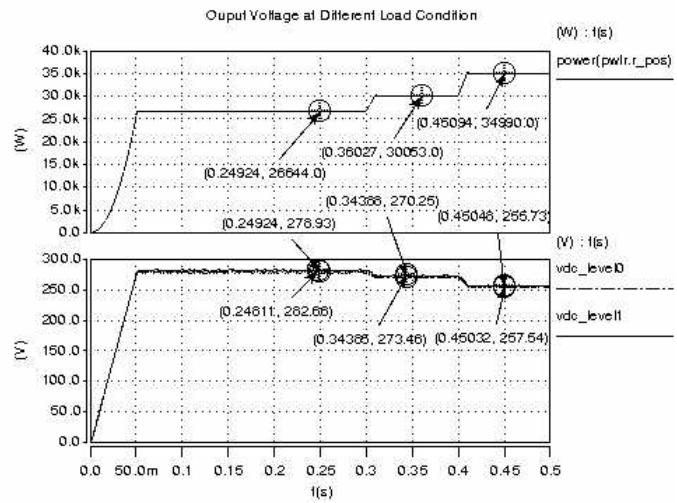

Figure 8 DC Output Voltage at Different Load Power

BRUSHLESS DC MOTOR RESULTS

From 0.6 second to 0.7 seconds, the speed command changes from 0 to 1200RPM, then keeps it until 1.0 second. The electrical load resistor changes to 36.4 ohms and the power consumed by it can be ignored. As we know the maximum power of the generator is 30KW, which would not be able to drive a 50KW BLDC[5]. At this time, the battery should be used to assist the generator with driving the brushless DC motor. In this example, the controller is only controlling the speed, however it can be extended to control the torque if the reference signal is the torque of the brushless DC motor. As shown in figure 9. The motor speeds for both levels of motor controller match very well.

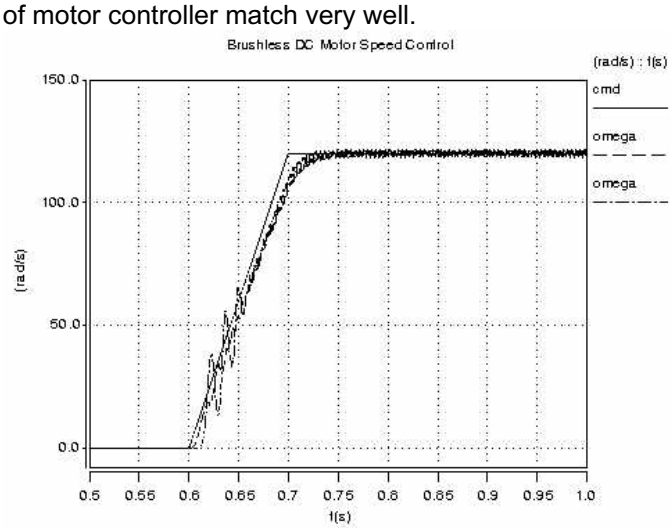

Figure 9 Brushless DC Motor Speed

Please note the synchronizing signals s1-s6 in the first level of the motor controller. After the motor reaches its

steady state with a speed of 1200RPM, the commutation frequency is about 80Hz, which is 4 times of the motor frequency. This is because the motor has 4 pairs of poles. The commutation sequence is: (s6,s1) -> (s1,s2) -> (s2,s3) -> (s3,s4) -> (s4,s5) -> (s5,s6) -> (s6,s1). The results for the average PWM controller is shown in figure 10. It takes 14.7 CPU seconds for a Sun-Fire-V240 to simulate the brushless motor behavior from 0.5 to 1 second.

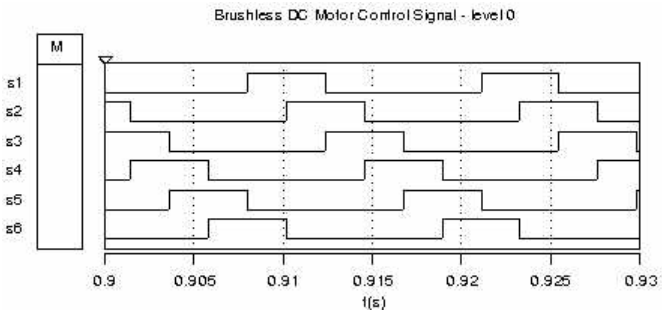

Figure 10 Brushless DC Motor Commutation Signal without PWM (level 0)

With the level1 PWM motor controller, the detail PWM switching can be simulated, as shown in figure 11. The PWM control is performed on the upper arm switches: sw1, sw3 and sw5. During the PWM off period, neutral point voltage is almost zero, which can be measured using a sensorless control scheme. During each on state, there are about 80 PWM pulses. Due to the high PWM frequency (20 KHz), the time-step of the simulation is limited to 0.005m, and it takes 577 CPU seconds to complete the simulation of motor behavior, which is 40 times longer than the first level of the PWM brushless DC motor controller.

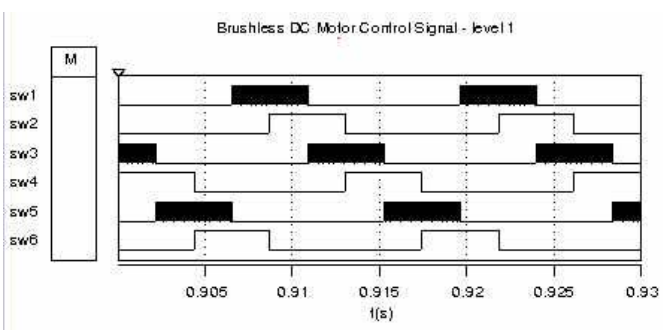

Figure 11 Brushless DC Motor Commutation Signals with PWM (level 1)

THD (TOTAL HARMONIC DISTORTION) OF INPUT CURENT

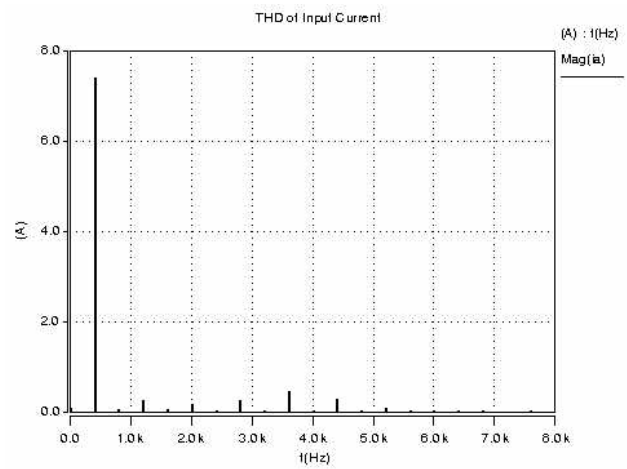

Figure 12 THD of Input Current

After time 0.8 second, the motor reaches its steady state, the rotational speed keeps stable at 1200RPM, and the total load power during this time period is about 50KW. The THD (Total Harmonic Distortion) of the input current can be obtained by Fourier analysis. As you can see in figure 12, the THD of input current is about 8.97% which is less than the specification 10%. Also it can be seen that major harmonics for 12-pulse transformer/rectifier locate at 4400Hz and 5200Hz, magnitudes are about 0.5 and 0.4, which is very close to the experimental expressions [6]:

$$Harmonics = 6kn \pm 1$$

$$Mag = \frac{1}{6kn \pm 1}$$

DC OUTPUT VS. INPUT FREQUENCY

From time 1.1 second to 1.4 second, the frequency of generator output voltage varies from 400Hz to 300Hz at time 1.25 second, then goes up to 800Hz at time 1.4 second, and goes down back to 400Hz at 1.5 second. The DC output is shown in figure 13. As you can see, the DC output only changes 0.05% when the input frequency changes 500Hz. The DC output is insensitive to the input frequency.

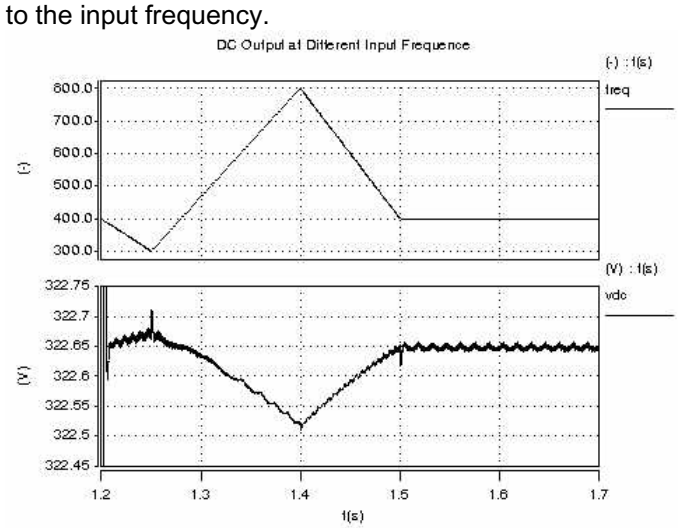

Figure 13 DC Output Voltage vs. Input Frequency

OVER-CURRENT PROTECTION

From time 1.4 to 1.5 seconds, the input line voltage changes from 325V to 425V. The electrical load changes back to 2.43 ohms which consumes the power of 30KW. In this situation the input current can increase up to 95A without over-current protection. This situation could cause a serious damage to either the generator or the AC/DC converter. In this example, We set the threshold current to 95A, and, as you can see in figure 14, once the input line current exceeds 95A, the over-current protection will be active and all the loads will be disconnected safely from the power supply.

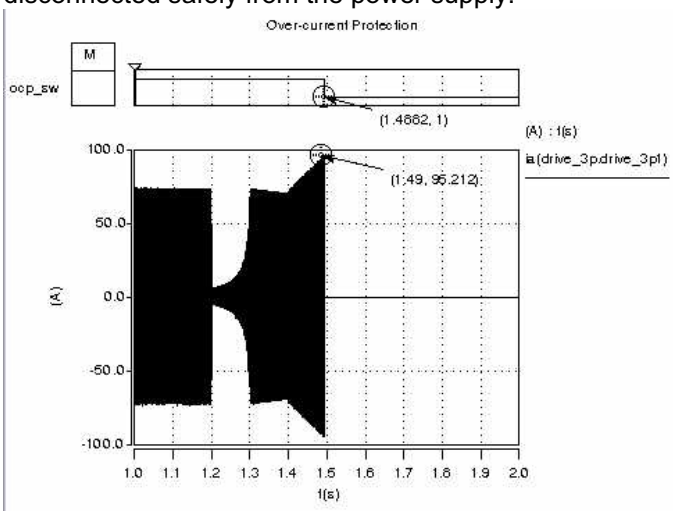

Figure 14 Over-current Protection

UNDER-VOLTAGE PROTECTION

From time 1.7 to 1.8 seconds, the electrical load change from 2.43 to 0.5, the consuming power changes from 30KW to 150KW, which is three times the maximum output power of the brushless DC motor. It will pull down the DC output dramatically, as shown in figure 15. In this example, we set the threshold voltage of the under-voltage protection to 240V. Once the DC output drops below 240V, the under-voltage protection circuit will be active and it disconnects the electrical load from the DC supply. For the safety reasons, it may also disconnect the brushless DC motor from the wheel in case there is a short-circuit failure in the brushless DC driver.

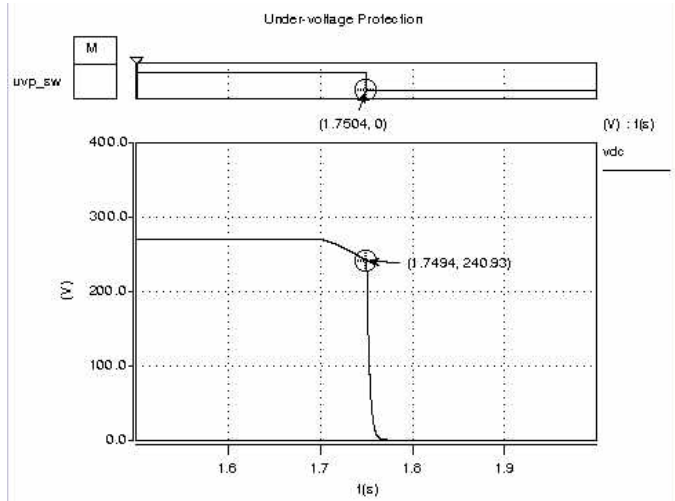

Figure 15 Under-voltage Protection

CONCLUSION

In the paper, a complete prototype of a hybrid electrical vehicle power system was presented. In order to simulate such a complicated system, top-down design methodology was used to abstract the system to enable maximum simulation of the designs at different levels. At the highest behavior level, the average modeling technique was used to simplify two key components in the system: 12-pulse AC/DC converter and the PWM motor controller. It was shown that this model can improve the simulation speed by 40 times without losing the accuracy at the top level of behavioral analysis. For the second level simulation, ideal linear transformers and switches were used to model the detailed behaviors of the AC/DC converter and PWM motor controller. With these ideal models, the second level design can provide a more thorough analysis of the system behavior, such as phase shift by the transformer in the AC/DC converter and the high frequency PWM switching in the motor controller. By using a virtual prototyping platform such as Saber from Synopsys, designers are able to perform rapid analysis of their system designs and make accurate tradeoffs to improve predictability and reliability prior to production. The simulation using virtual prototyping for both levels closely matched in results, and both met the specifications.

REFERENCES

1. Roger Allan, “Setting the Standard for Hybrid Cars” Electric Design
2. “Toyota Prius Technical Information”, hppt://www.cleangreencar.co.nz/page/prius-technical-info
3. “TOYOTA HYBRID SYSTEM THS II”, TOYOTA
4. Mehrdad Ehsani, Yimin Gao, etc., “Modern Electric, Hybrid Electric, and Fuel Cell Vehicle. Fundamentals, Theory, and Design”, CRC Press
5. Akira Kawahashi, “A New-Generation Hybrid Electric Vehicle and Its Supporting Power Semiconductor Devices” Proceedings of 2004 International

Symposium on Power Semiconductor Devices & Ics, pp 23-29
6. Tinsly C T, 2003, “Modeling of Multi-pulse Transformer Rectifier Units in Power Distribution Systems”, Master’s Thesis, Virginia Tech.
7. Application Note:1129 “PWM Management for BLDC Motor Drives Using the ST72141”
8. Cheng K W E, 1998, “Comparative Study of AC/DC Converters for More Electric Aircraft”, IEE Power Electronics and Variable Speed Drives, pp 299-304.

CONTACT

Min Zhang received the B.S. degree in electrical engineering from University of Electronics Science and Technology of China (UESTC) in 1992, and M.S. and Ph.D. degrees in electrical engineering from the Institute of Microelectronics, UESTC in 1995, and 1998 respectively. In 1999, he joined the Institute of Microelectronics of Tsinghua University as a Postdoctoral Associate, where he focused on power devices modeling and characterization. In 2001, he joined Saber R&D team of Synopsys, Inc., and since then, he has worked in modeling and characterization tool spanning many different technology disciplines. Min Zhang can be reached at minz@synopsys.com.