Saber Tutorial

Quasi-resonant Flyback Converter Simulation

Alan Courtay

March 7, 2016

Agenda

- Quasi-Resonant Flyback Converter (AN1326)
  - Principles of Operation
  - Simulation vs. Measurement
- Accurate Datasheet-Driven Modeling
  - Controller Chip
  - MOSFET
  - Transformer
- Automated Verification
  - EMI
  - Loss / Efficiency

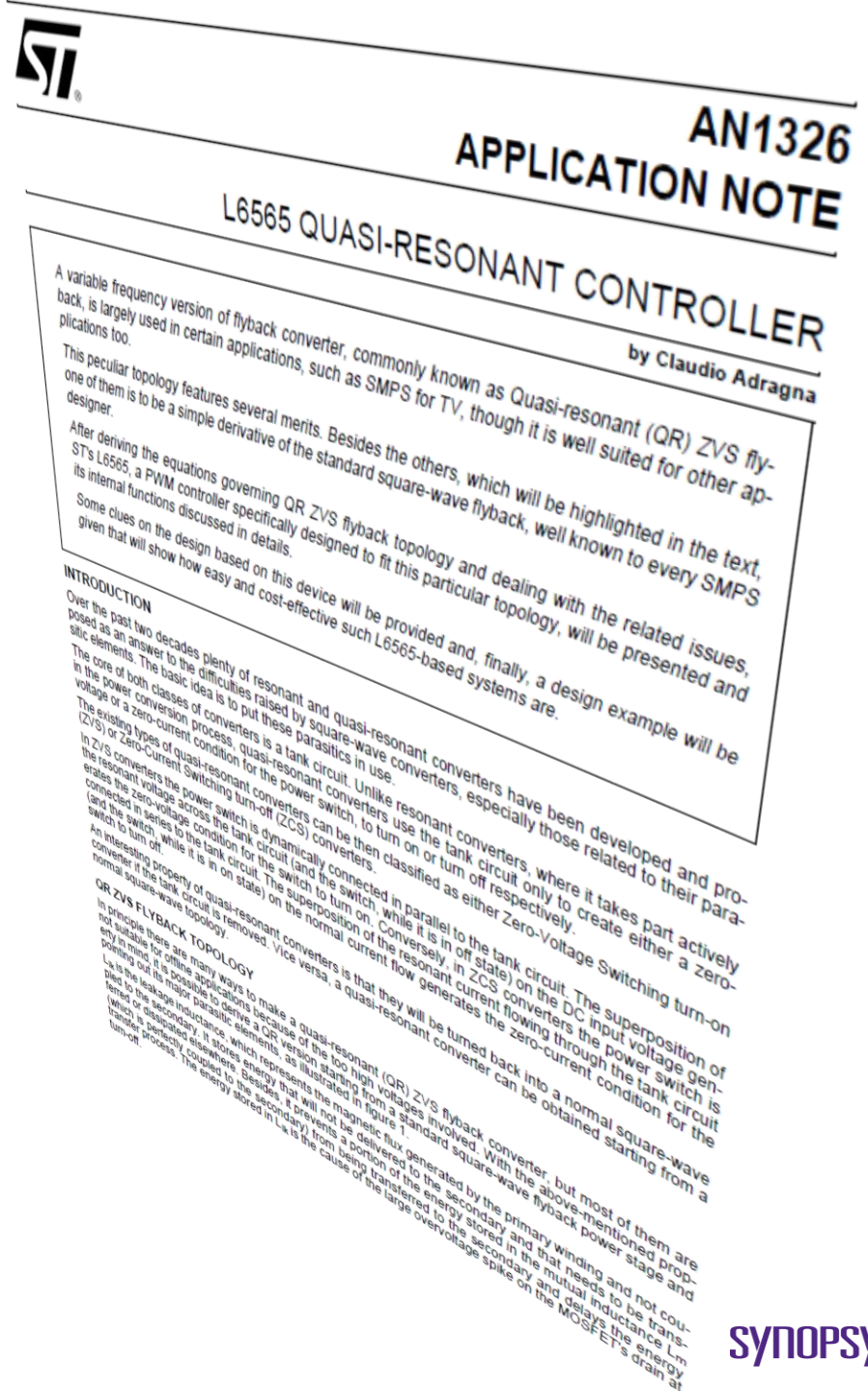

AN1326
APPLICATION NOTE

L6565 QUASI-RESONANT CONTROLLER

by Claudio Adragna

A variable frequency version of flyback converter, commonly known as Quasi-resonant (QR) ZVS fly-back, is largely used in certain applications, such as SMPS for TV, though it is well suited for other applications too.

This peculiar topology features several merits. Besides the others, which will be highlighted in the text, one of them is to be a simple derivative of the standard square-wave flyback, well known to every SMPS designer.

After deriving the equations governing QR ZVS flyback topology and dealing with the related issues, ST's L6565, a PWM controller specifically designed to fit this particular topology, will be presented and its internal functions discussed in details.

Some clues on the design based on this device will be provided and, finally, a design example will be given that will show how easy and cost-effective such L6565-based systems are.

INTRODUCTION

Over the past two decades plenty of resonant and quasi-resonant converters have been developed and proposed as an answer to the difficulties raised by square-wave converters, especially those related to their parasitic elements. The basic idea is to put these parasitics in use.

The core of both classes of converters is a tank circuit. Unlike resonant converters, where it takes part actively in the power conversion process, quasi-resonant converters use the tank circuit only to create either a zero-voltage or a zero-current condition for the power switch, to turn on or turn off respectively.

The existing types of quasi-resonant converters can be then classified as either Zero-Voltage Switching turn-on (ZVS) or Zero-Current Switching turn-off (ZCS) converters.

In ZVS converters the power switch is dynamically connected in parallel to the tank circuit. The superposition of the resonant voltage across the tank circuit (and the switch) on the DC input voltage generates the zero-voltage condition for the switch to turn on. Conversely, in ZCS converters the power switch is connected in series to the tank circuit. The superposition of the resonant current flowing through the tank circuit (and the switch, while it is in on state) on the normal current flow generates the zero-current condition for the switch to turn off.

An interesting property of quasi-resonant converters is that they will be turned back into a normal square-wave converter if the tank circuit is removed. Vice versa, a quasi-resonant converter can be obtained starting from a normal square-wave topology.

QR ZVS FLYBACK TOPOLOGY

In principle there are many ways to make a quasi-resonant (QR) ZVS flyback converter, but most of them are not suitable for offline applications because of the too high voltages involved. With the above-mentioned property in mind it is possible to derive a QR version starting from a standard square-wave flyback power stage and pointing out its major parasitic elements, as illustrated in figure 1.

L_{lk} is the leakage inductance, which represents the magnetic flux generated by the primary winding and not coupled to the secondary. It stores energy that will not be delivered to the secondary and that needs to be transferred or dissipated elsewhere. Besides, it prevents a portion of the energy stored in the mutual inductance L_m (which is perfectly coupled to the secondary) from being transferred to the secondary and delays the energy transfer process. The energy stored in L_{lk} is the cause of the large overvoltage spike on the MOSFET's drain at

L6565-Based 50W QR ZVS Flyback

Vin: 50/60Hz, 88 to 264 Vac

Vout1:	105 V ± 5%
Iout1:	0.1 to 0.35 A
Vripple1:	1%

Vout2:	14 V ± 10%
Iout2:	0.1 to 1 A
Vripple2:	1%

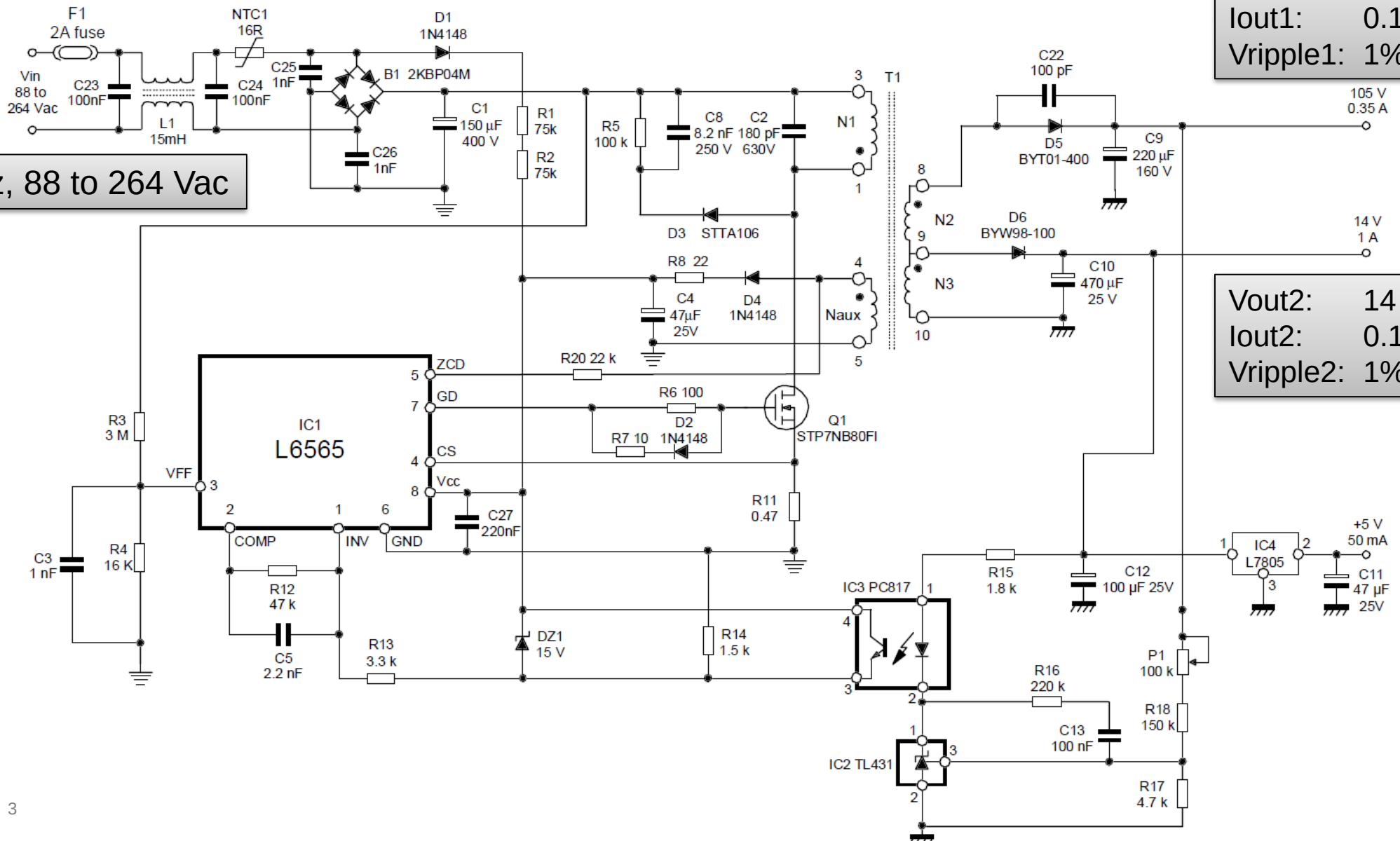

SYNOPSYS®

L6565-Based 50W QR ZVS Flyback

Vout1: 105 V ± 5%
Iout1: 0.1 to 0.35 A
Vripple1: 1%

Vin: 50/60Hz, 88 to 264 Vac

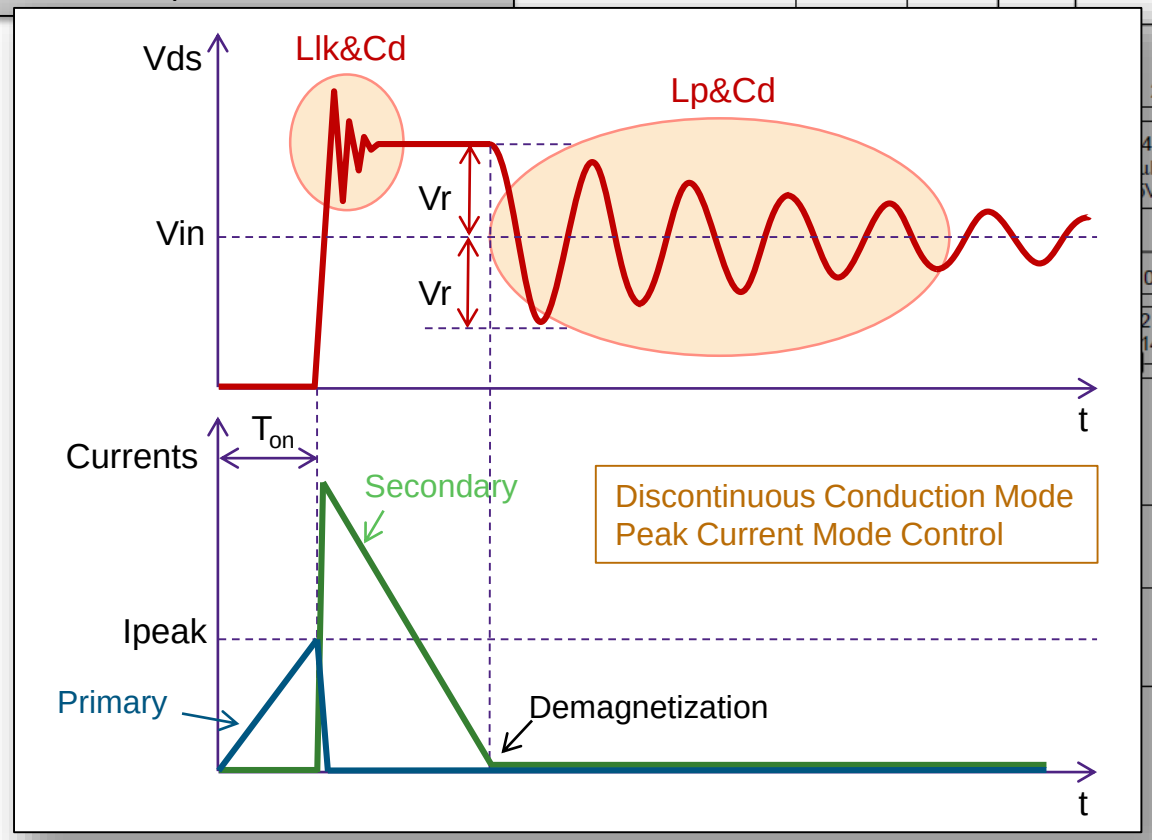

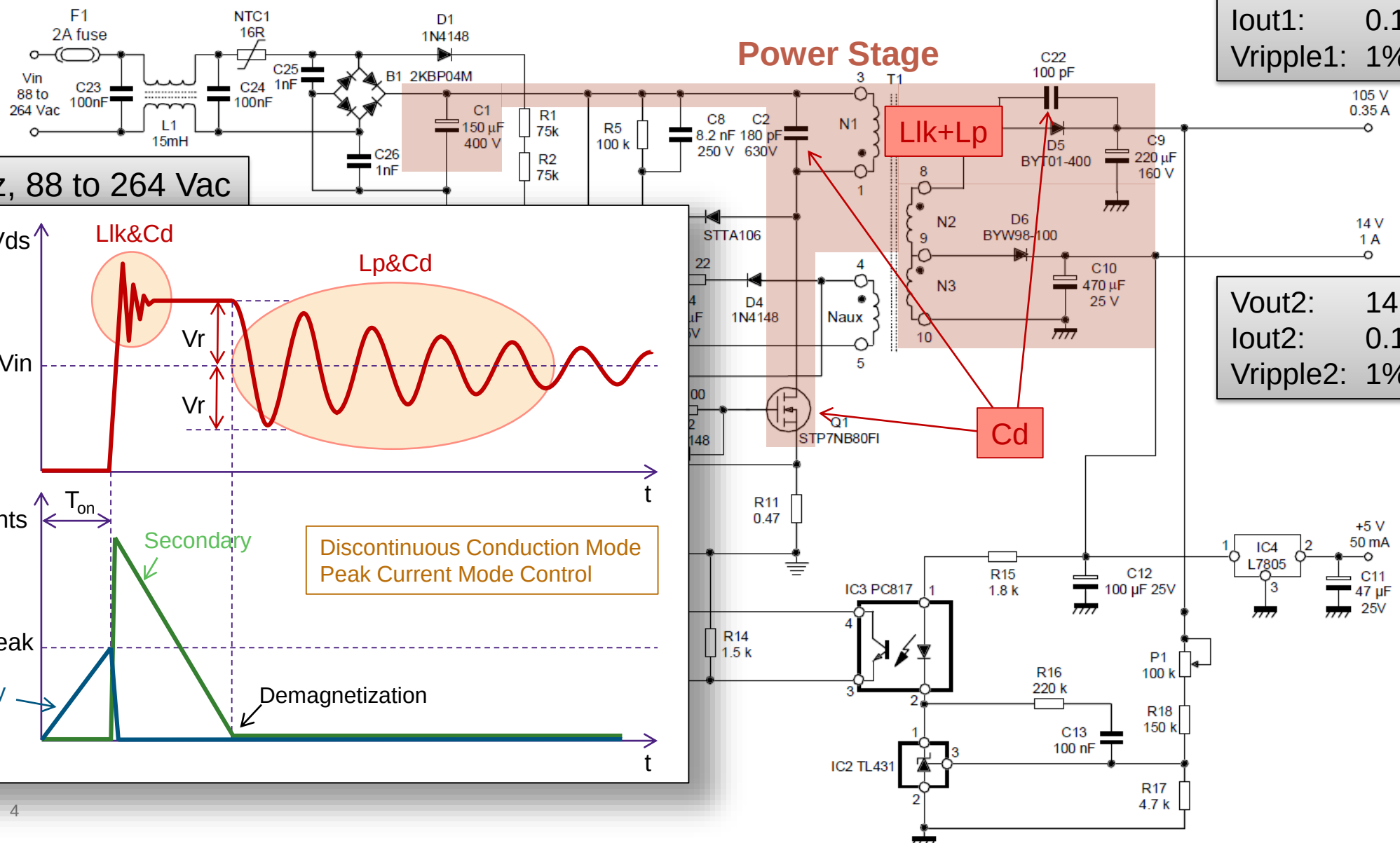

Vout2: 14 V ± 10%
Iout2: 0.1 to 1 A
Vripple2: 1%

SYNOPSYS®

L6565-Based 50W QR ZVS Flyback

Vout1: 105 V ± 5%
Iout1: 0.1 to 0.35 A
Vripple1: 1%

Vin: 50/60Hz, 88 to 264 Vac

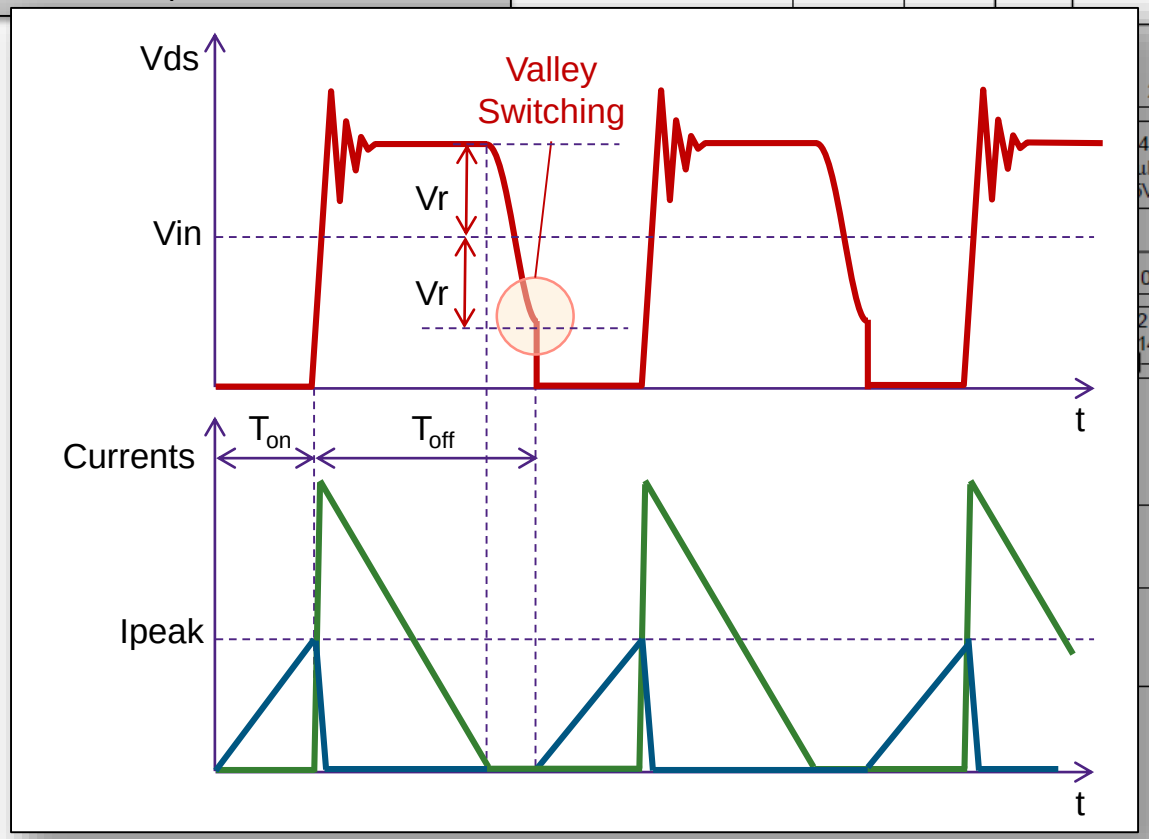

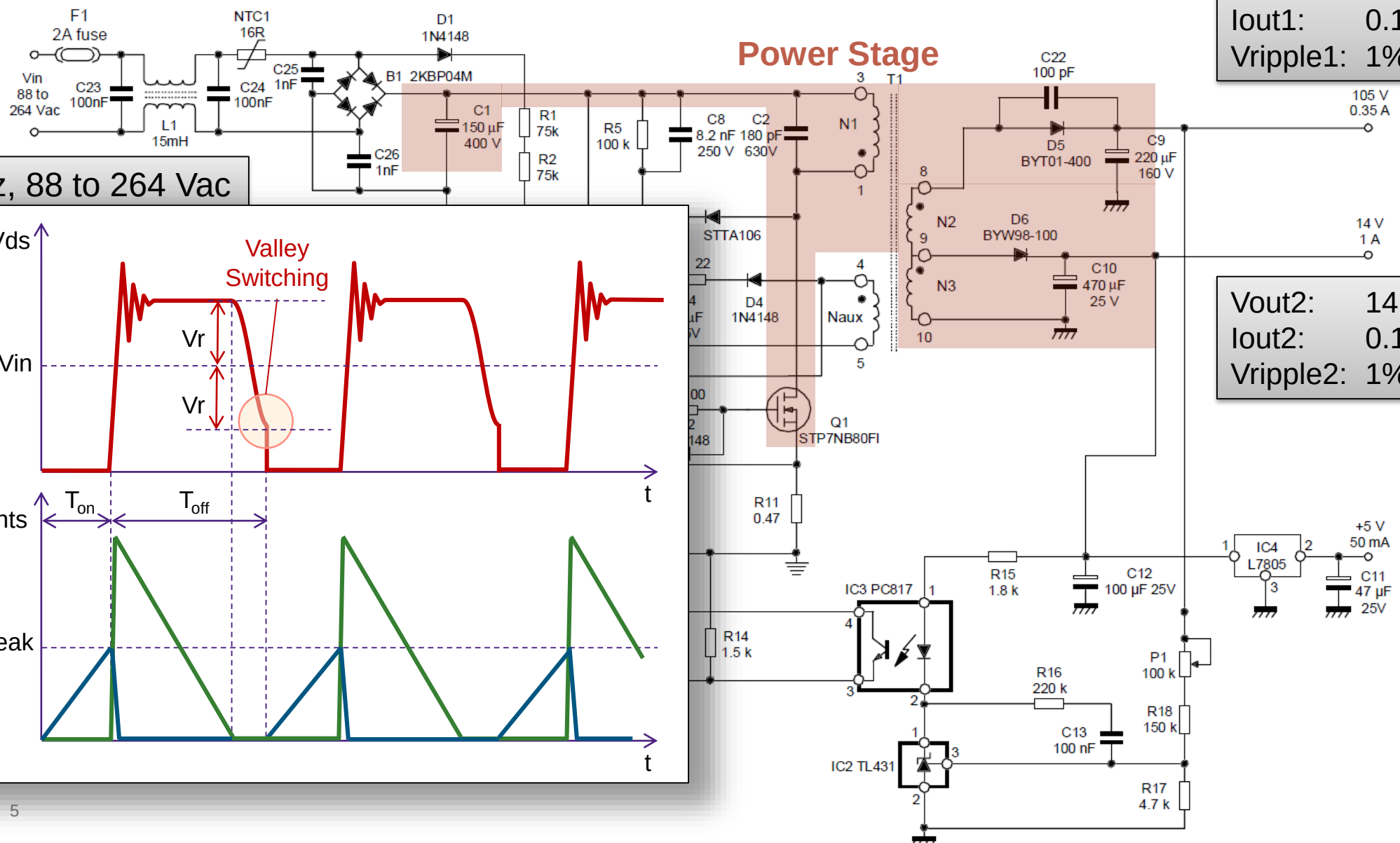

Vout2: 14 V ± 10%
Iout2: 0.1 to 1 A
Vripple2: 1%

SYNOPSYS®

L6565-Based 50W QR ZVS Flyback

Vout1: 105 V ± 5%
Iout1: 0.1 to 0.35 A
Vripple1: 1%

Vin: 50/60Hz, 88 to 264 Vac

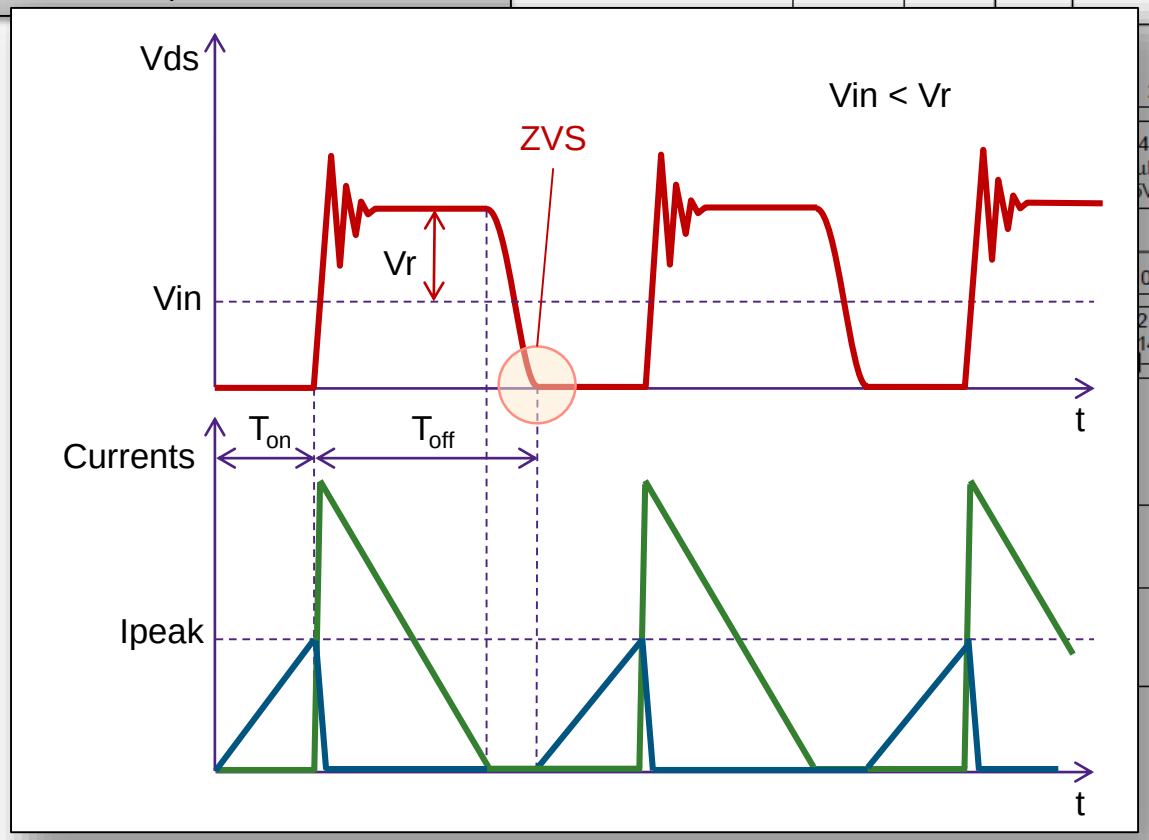

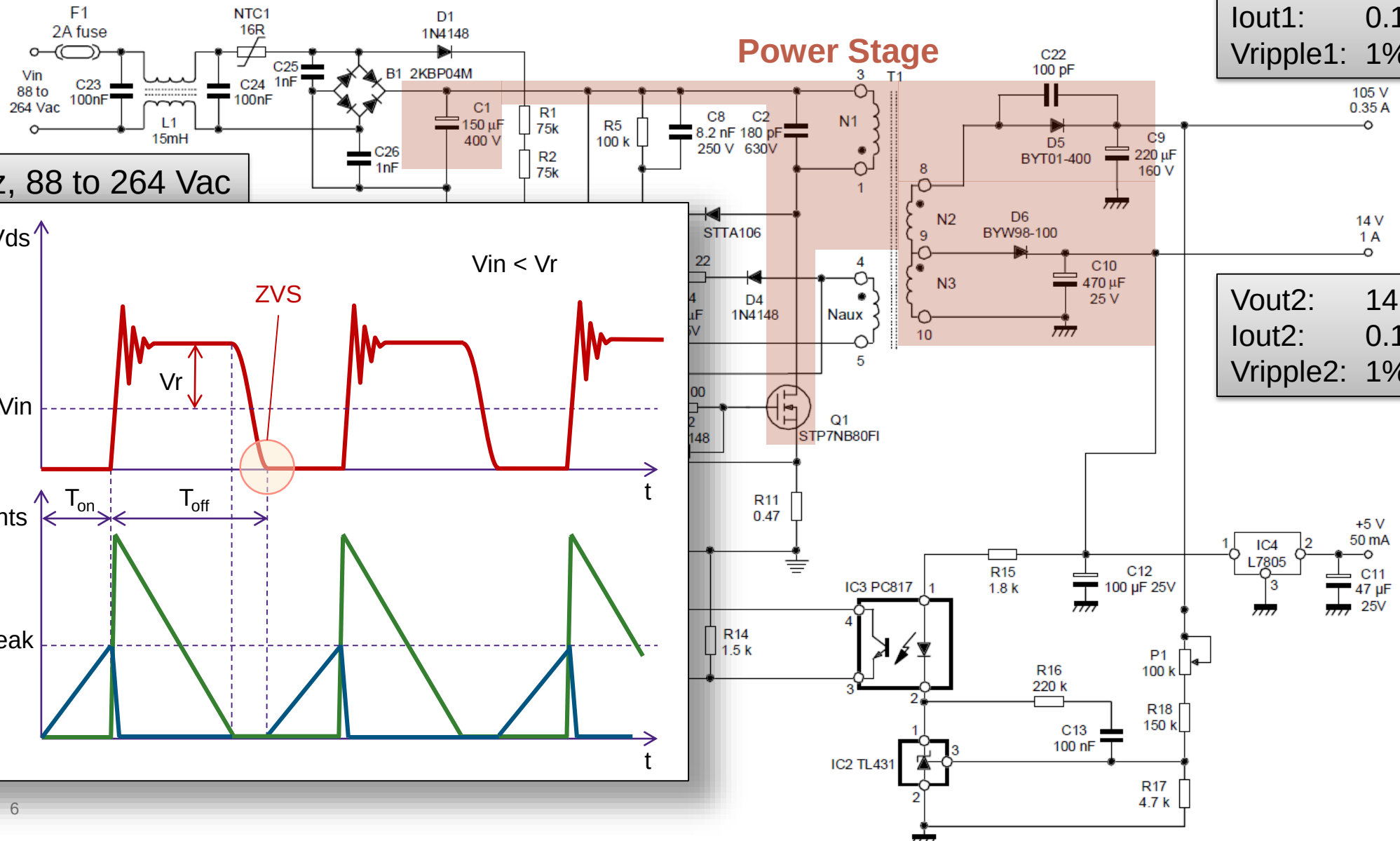

Vout2: 14 V ± 10%
Iout2: 0.1 to 1 A
Vripple2: 1%

SYNOPSYS®

L6565-Based 50W QR ZVS Flyback

Vout1: 105 V ± 5%
Iout1: 0.1 to 0.35 A
Vripple1: 1%

Vin: 50/60Hz, 88 to 264 Vac

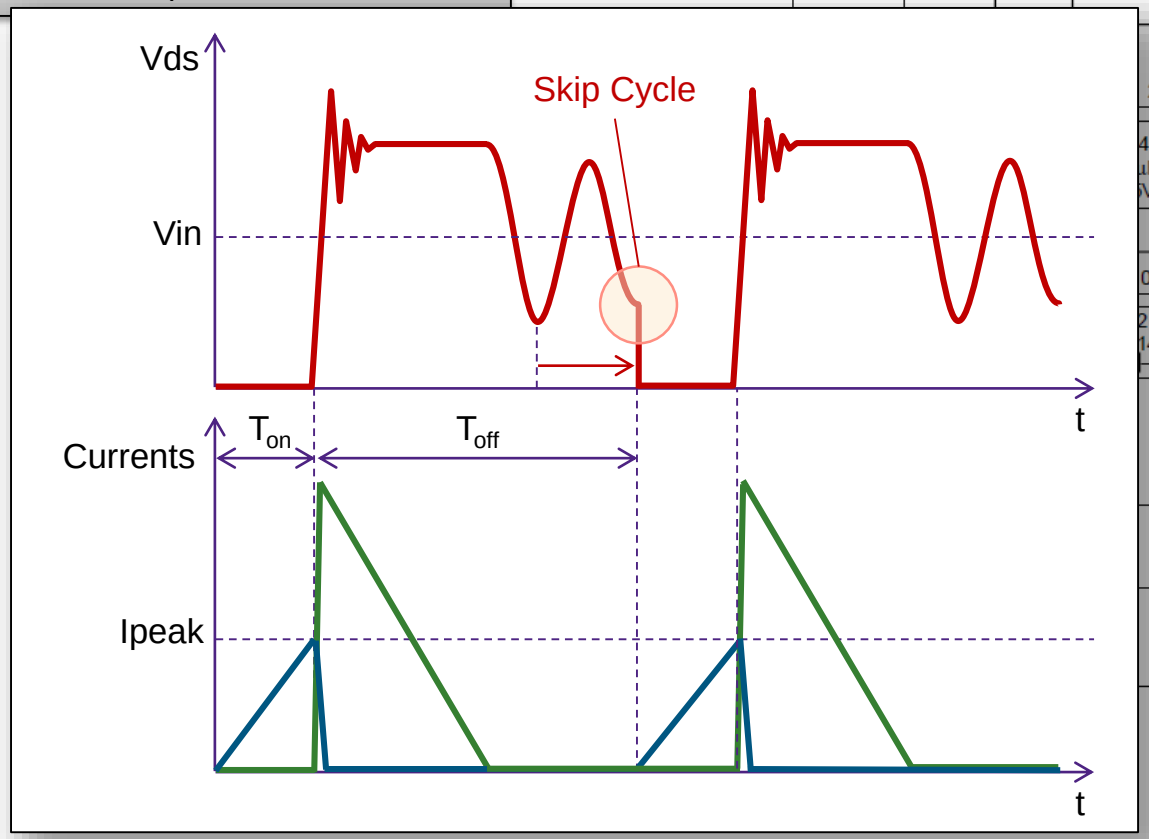

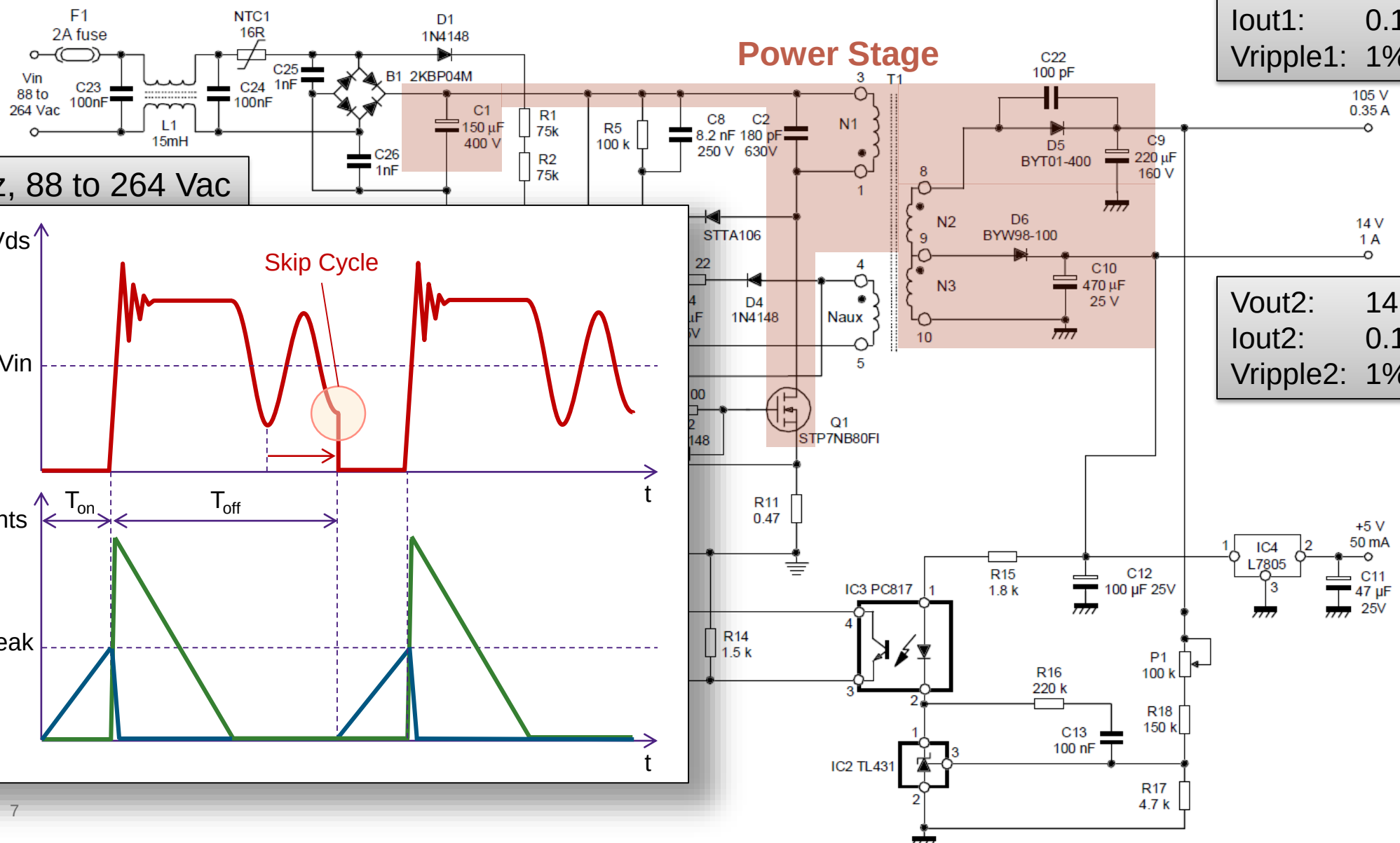

Vout2: 14 V ± 10%
Iout2: 0.1 to 1 A
Vripple2: 1%

SYNOPSYS®

L6565-Based 50W QR ZVS Flyback

Vin: 50/60Hz, 88 to 264 Vac

Vout1:	105 V ± 5%
Iout1:	0.1 to 0.35 A
Vripple1:	1%

Vout2:	14 V ± 10%
Iout2:	0.1 to 1 A
Vripple2:	1%

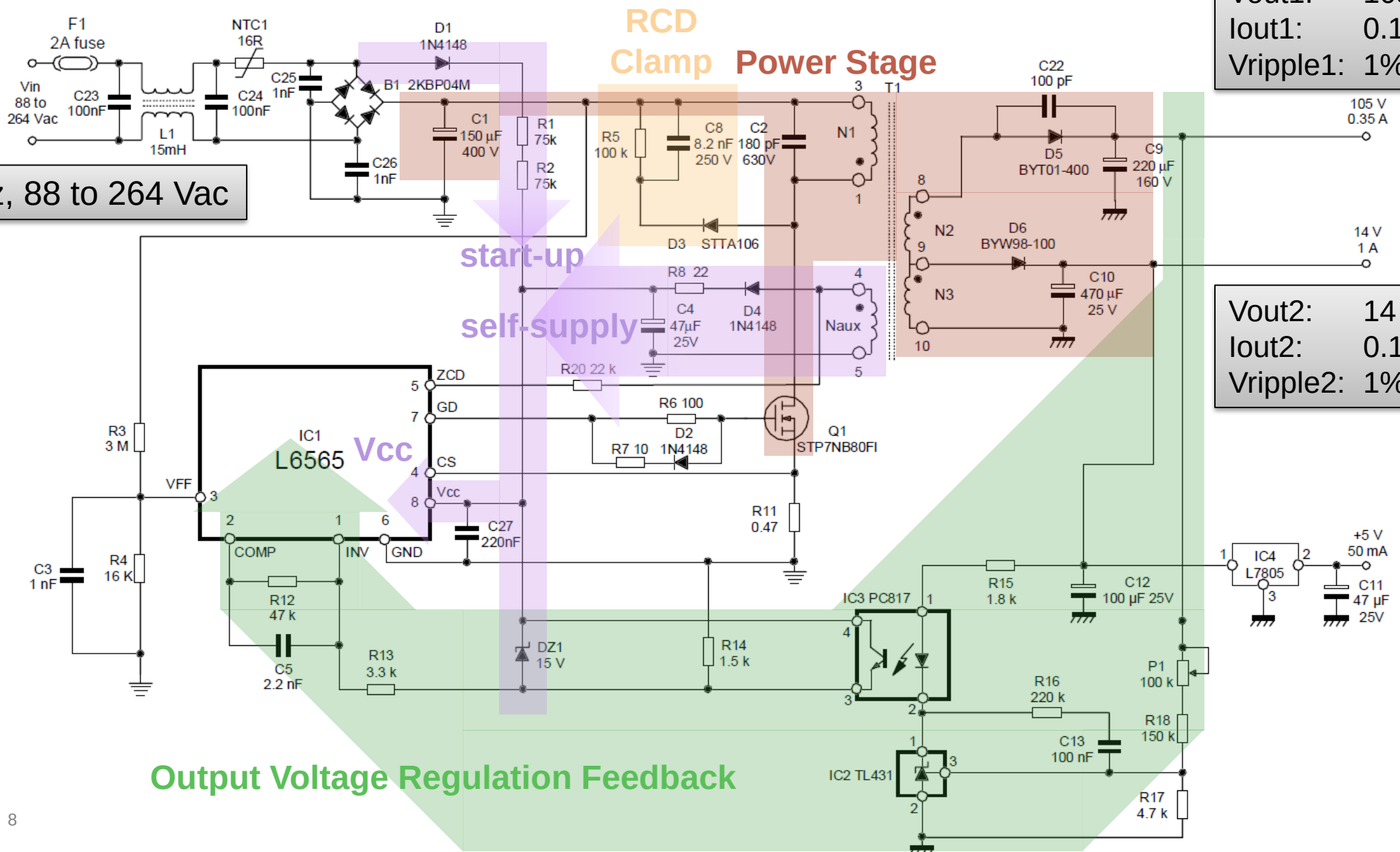

Output Voltage Regulation Feedback

SYNOPSYS®

L6565-Based 50W QR ZVS Flyback

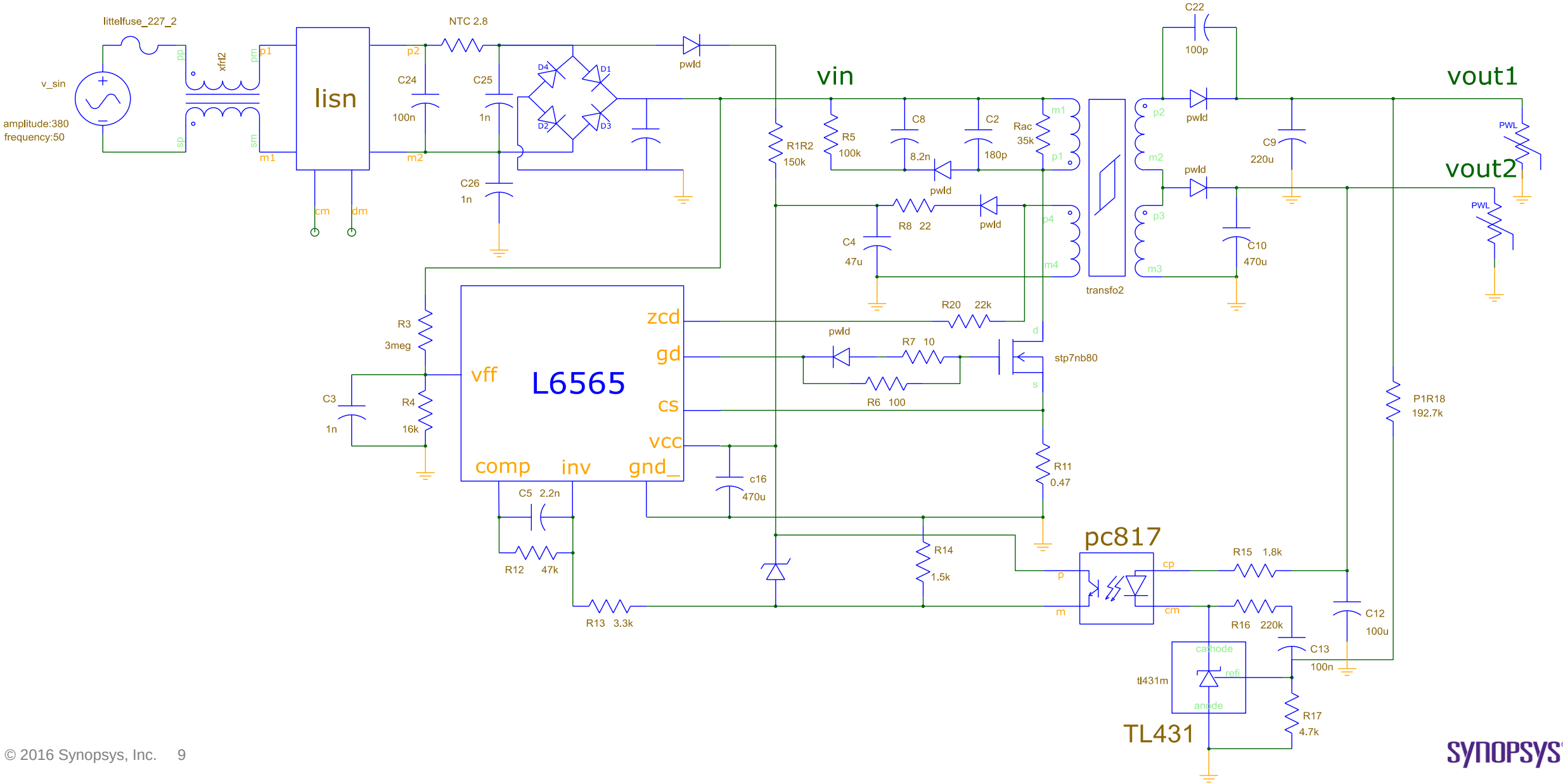

Agenda

- Quasi-Resonant Flyback Converter (AN1326)
  - Principles of Operation
  - Simulation vs. Measurement
- Accurate Datasheet-Driven Modeling
  - Controller Chip
  - MOSFET
  - Transformer
- Automated Verification
  - EMI
  - Loss / Efficiency

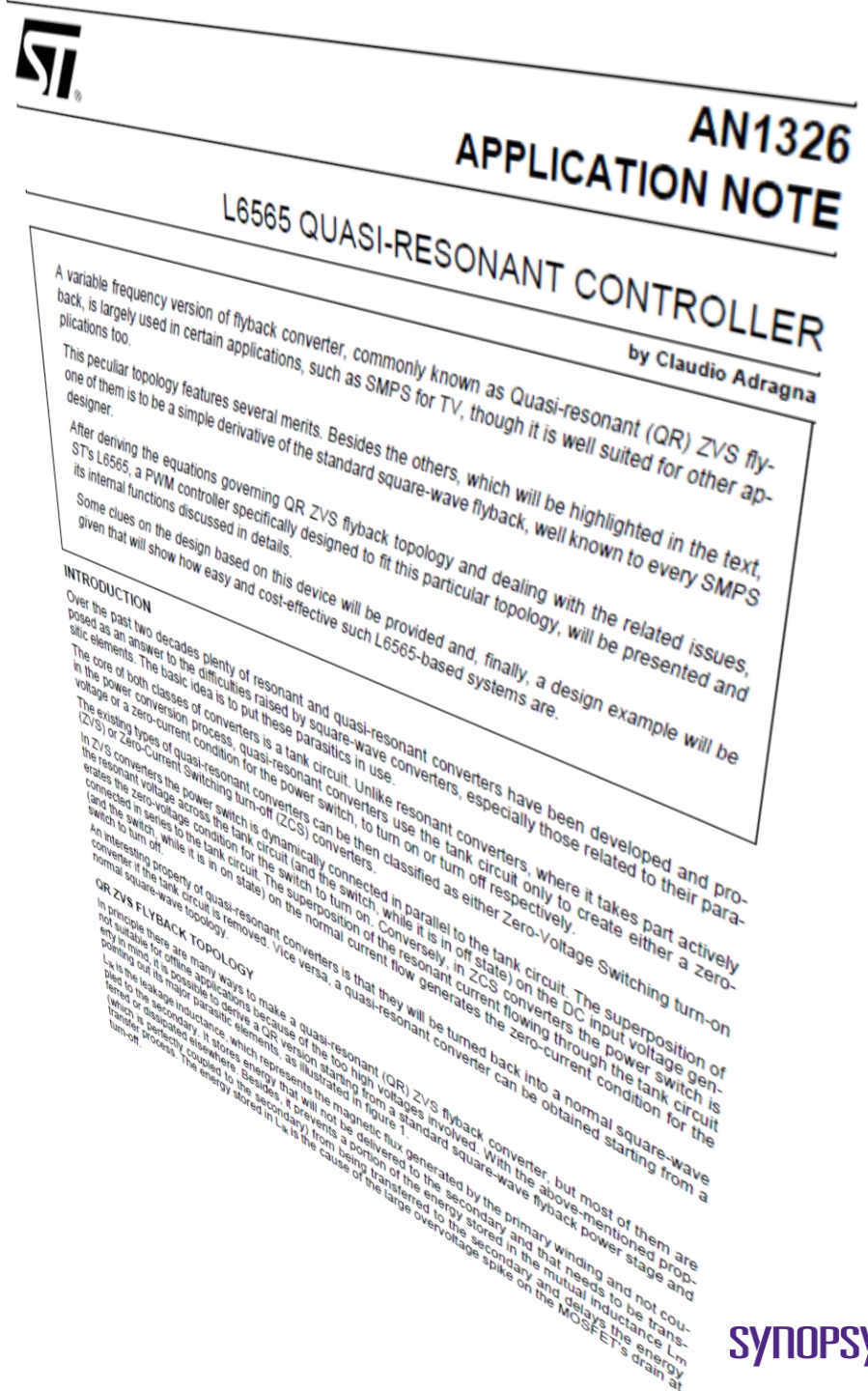

AN1326
APPLICATION NOTE

L6565 QUASI-RESONANT CONTROLLER

by Claudio Adragna

A variable frequency version of flyback converter, commonly known as Quasi-resonant (QR) ZVS fly-back, is largely used in certain applications, such as SMPS for TV, though it is well suited for other applications too.

This peculiar topology features several merits. Besides the others, which will be highlighted in the text, one of them is to be a simple derivative of the standard square-wave flyback, well known to every SMPS designer.

After deriving the equations governing QR ZVS flyback topology and dealing with the related issues, ST's L6565, a PWM controller specifically designed to fit this particular topology, will be presented and its internal functions discussed in details.

Some clues on the design based on this device will be provided and, finally, a design example will be given that will show how easy and cost-effective such L6565-based systems are.

INTRODUCTION

Over the past two decades plenty of resonant and quasi-resonant converters have been developed and proposed as an answer to the difficulties raised by square-wave converters, especially those related to their parasitic elements. The basic idea is to put these parasitics in use.

The core of both classes of converters is a tank circuit. Unlike resonant converters, where it takes part actively in the power conversion process, quasi-resonant converters use the tank circuit only to create either a zero-voltage or a zero-current condition for the power switch, to turn on or turn off respectively.

The existing types of quasi-resonant converters can be then classified as either Zero-Voltage Switching turn-on (ZVS) or Zero-Current Switching turn-off (ZCS) converters.

In ZVS converters the power switch is dynamically connected in parallel to the tank circuit. The superposition of the resonant voltage across the tank circuit (and the switch) on the DC input voltage generates the zero-voltage condition for the switch to turn on. Conversely, in ZCS converters the power switch is connected in series to the tank circuit. The superposition of the resonant current flowing through the tank circuit (and the switch, while it is in on state) on the normal current flow generates the zero-current condition for the switch to turn off.

An interesting property of quasi-resonant converters is that they will be turned back into a normal square-wave converter if the tank circuit is removed. Vice versa, a quasi-resonant converter can be obtained starting from a normal square-wave topology.

QR ZVS FLYBACK TOPOLOGY

In principle there are many ways to make a quasi-resonant (QR) ZVS flyback converter, but most of them are not suitable for offline applications because of the too high voltages involved. With the above-mentioned property in mind it is possible to derive a QR version starting from a standard square-wave flyback power stage and pointing out its major parasitic elements, as illustrated in figure 1.

L_m is the magnetic inductance, which represents the magnetic flux generated by the primary winding and not coupled to the secondary. It stores energy that will not be delivered to the secondary and that needs to be transferred or dissipated elsewhere. Besides, it prevents a portion of the energy stored in the mutual inductance (L_m + L_k) is the leakage inductance, which represents the magnetic flux generated by the primary winding and not coupled to the secondary. It stores energy that will not be delivered to the secondary and that needs to be transferred or dissipated elsewhere. Besides, it prevents a portion of the energy stored in the mutual inductance (L_m + L_k) from being transferred to the secondary and delays the energy transfer process. The energy stored in L_k is the cause of the large overvoltage spike on the MOSFET's drain at turn-off.

Current Sense and Primary Voltage

Full Load, Vin = 100 V

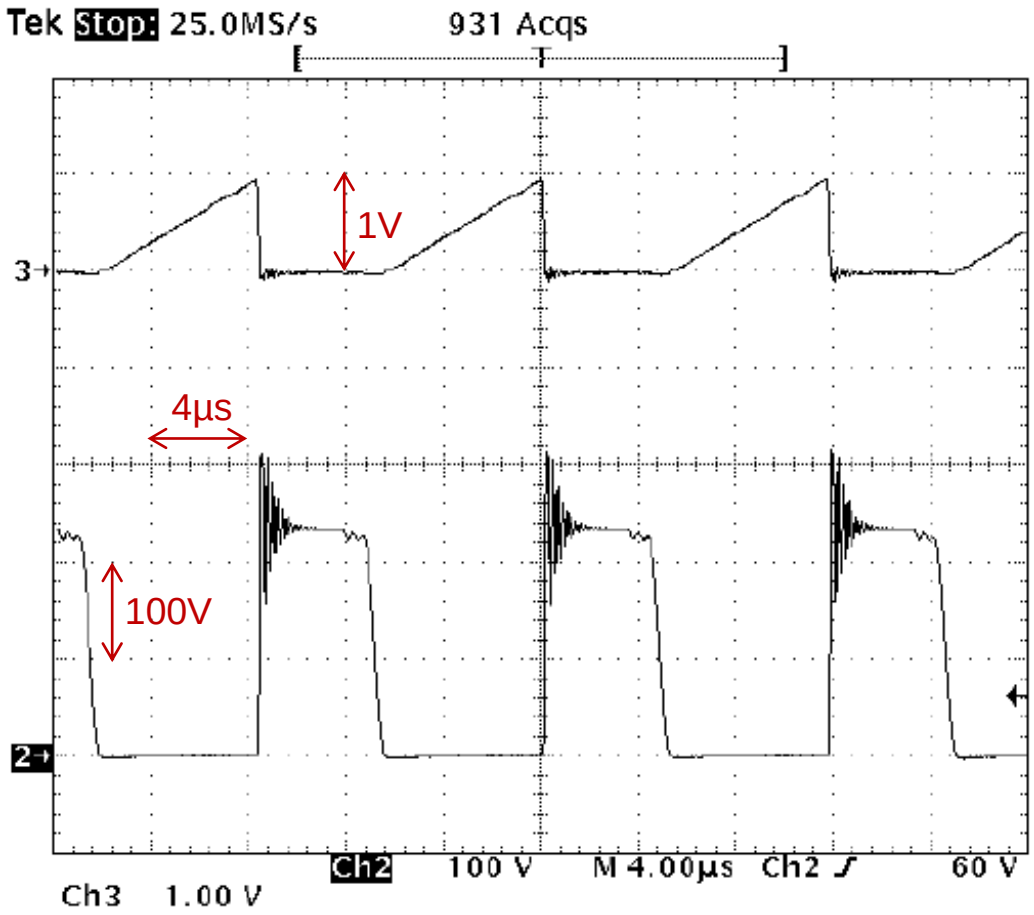

Ch2: Q1 drain voltage
Ch3: current sense pin

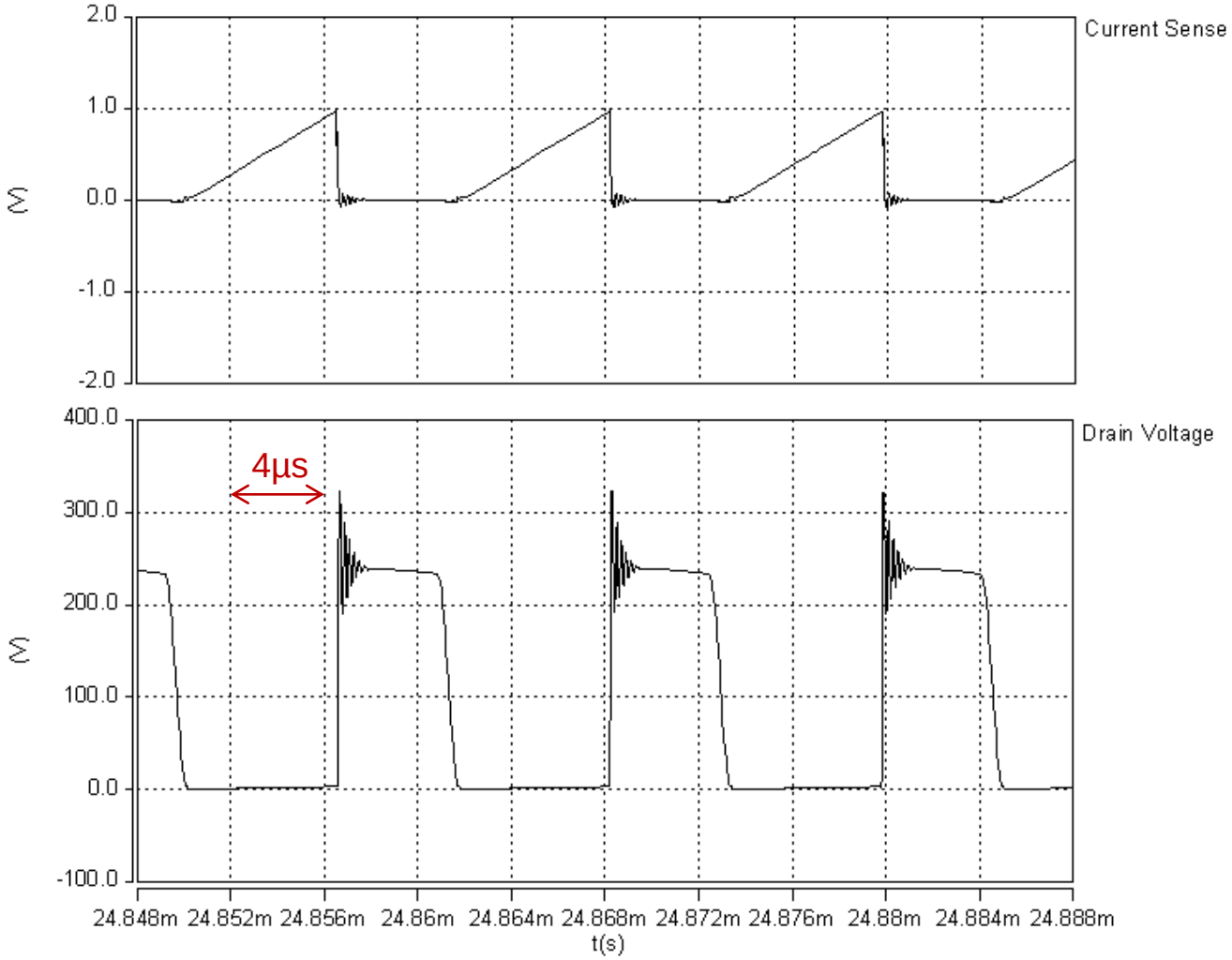

Current Sense and Primary Voltage

Full Load, Vin = 380 V

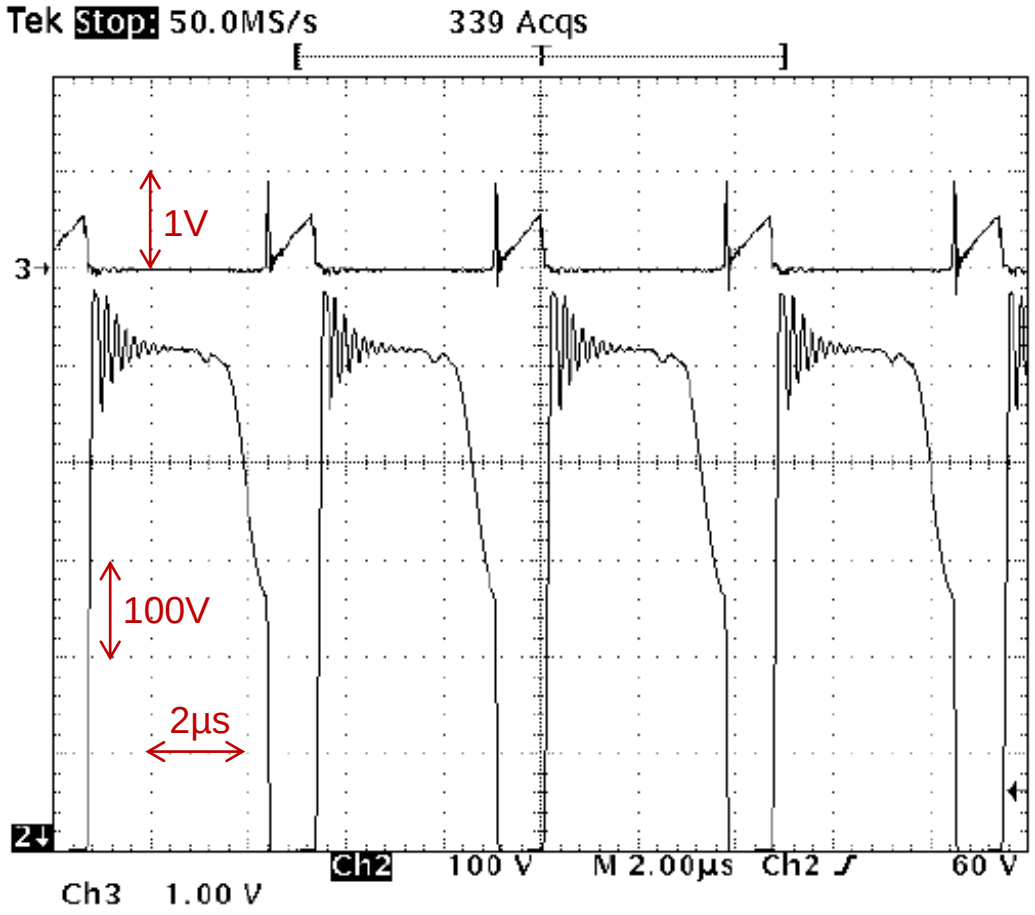

Ch2: Q1 drain voltage
Ch3: current sense pin

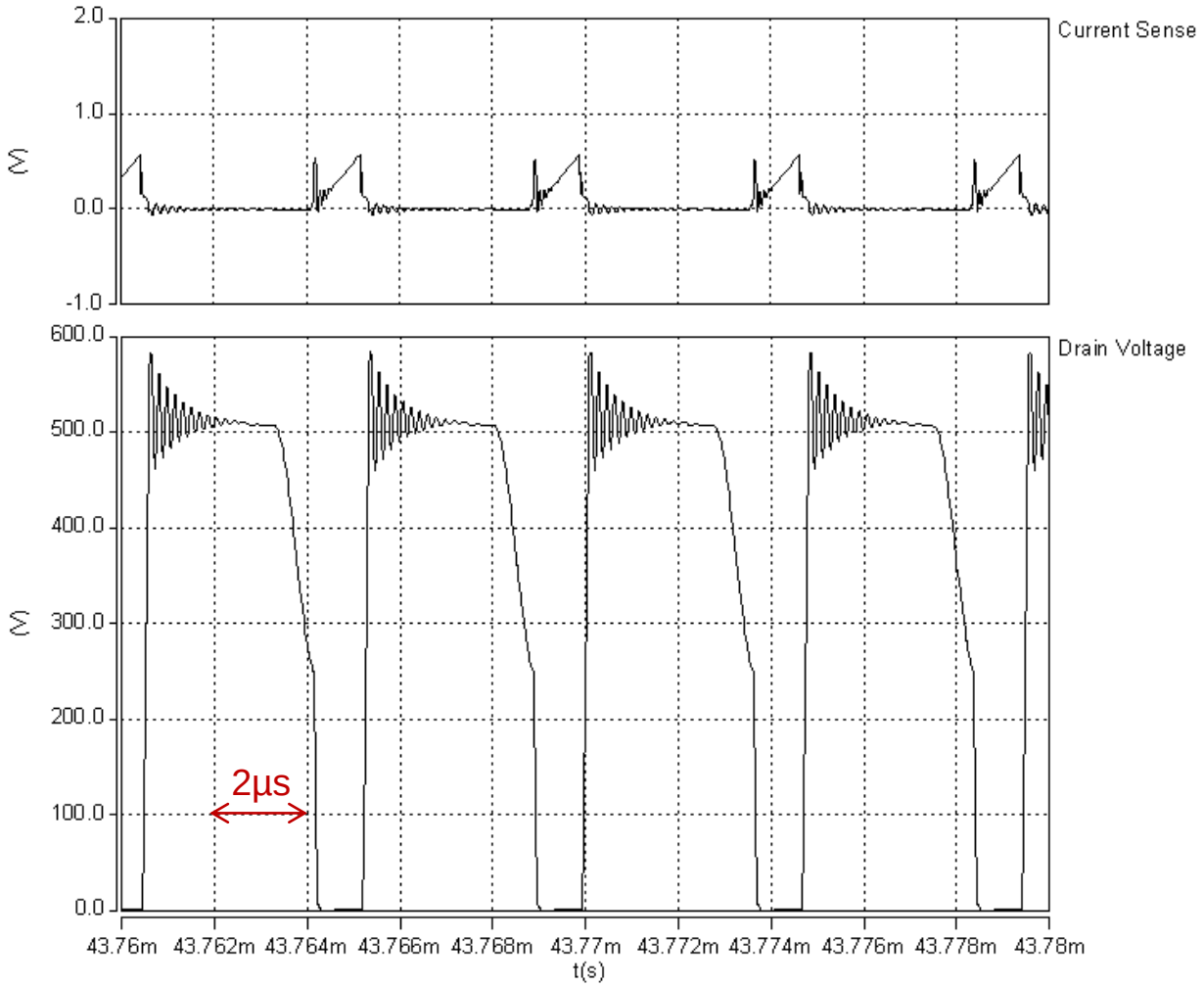

Current Sense and Primary Voltage

Half Load, Vin = 100 V

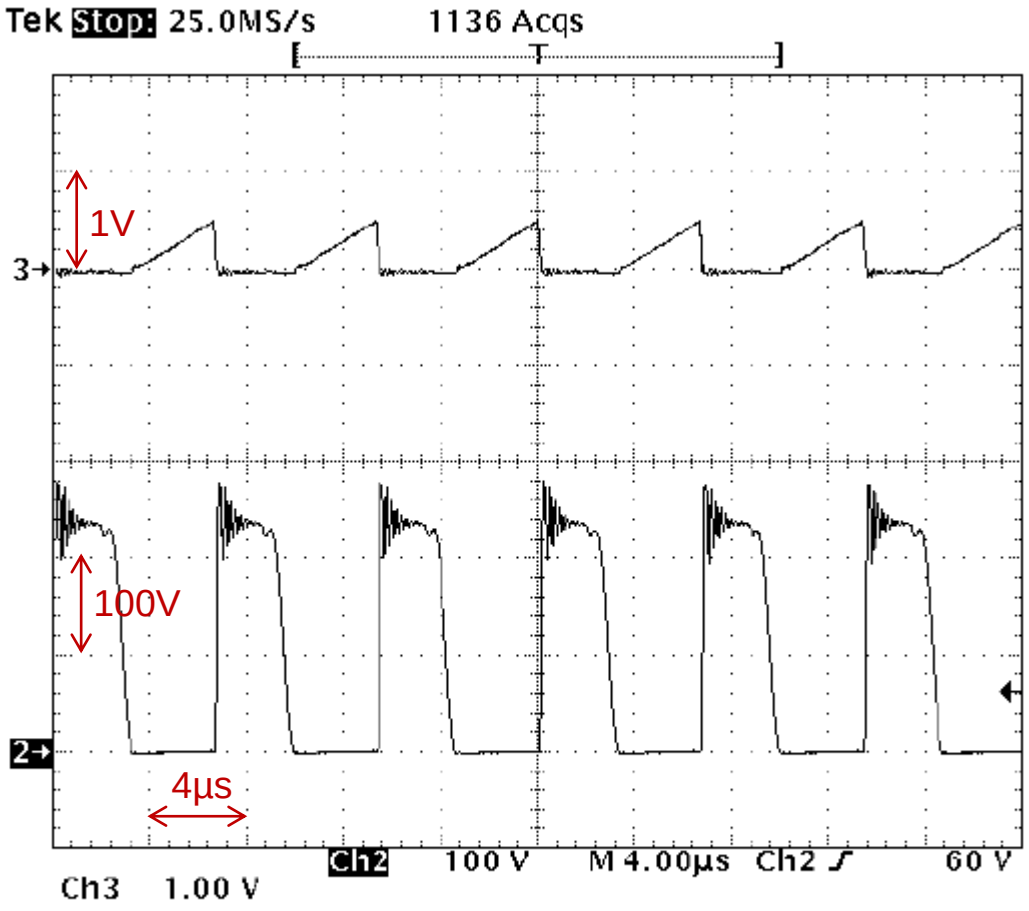

Ch2: Q1 drain voltage
Ch3: current sense pin

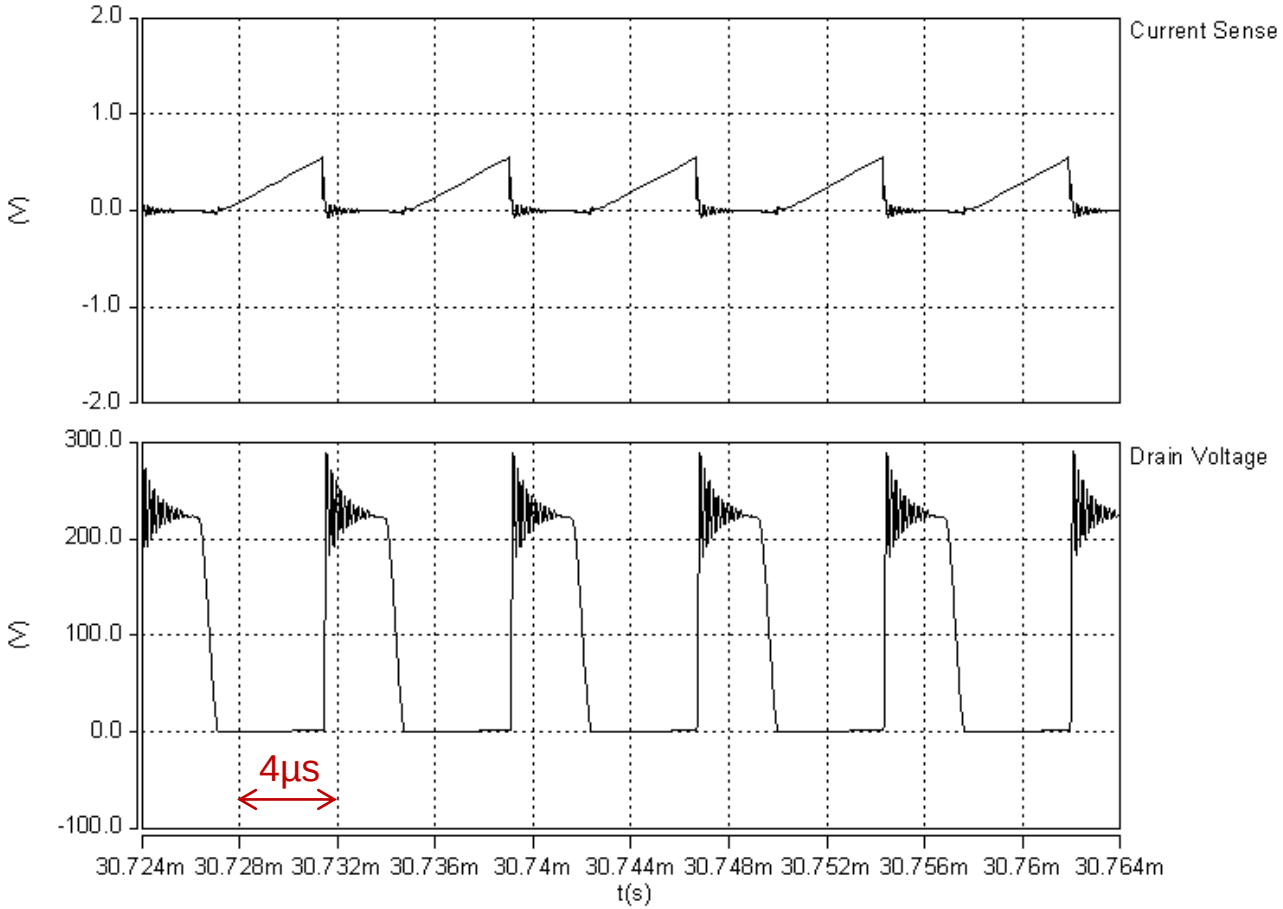

SYNOPSYS®

Current Sense and Primary Voltage

Half Load, Vin = 380 V

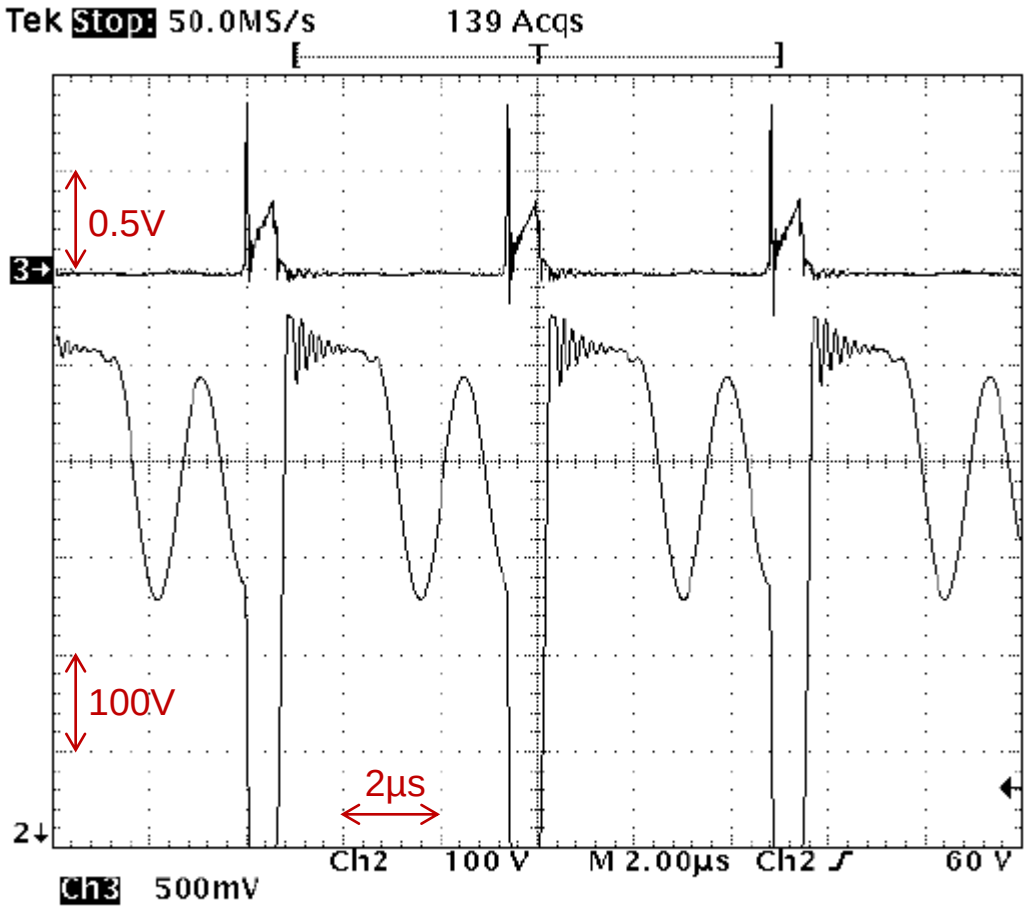

Ch2: Q1 drain voltage
Ch3: current sense pin

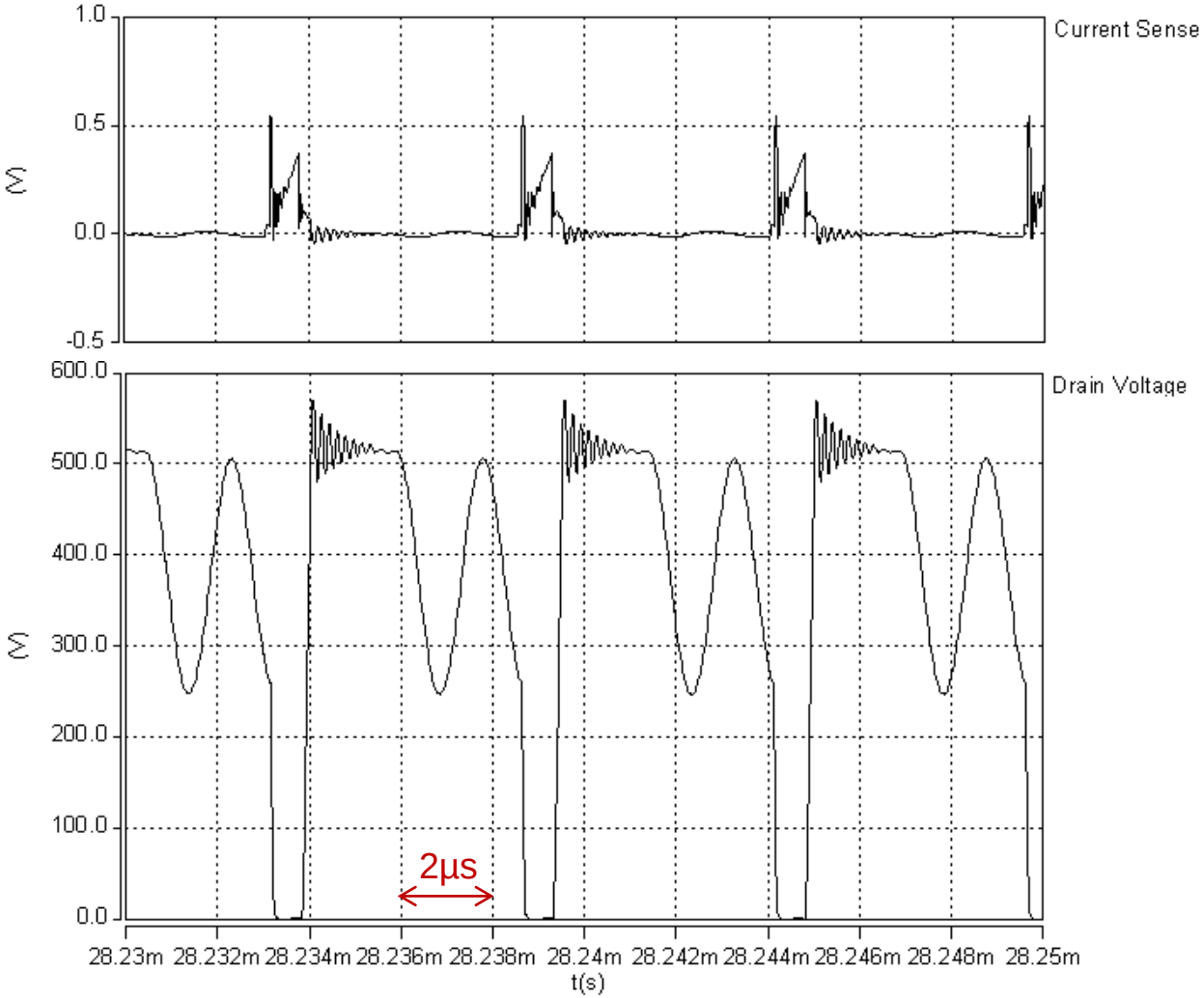

Cycle Skipping / Frequency Foldback

Light Load, Vin = 300 V

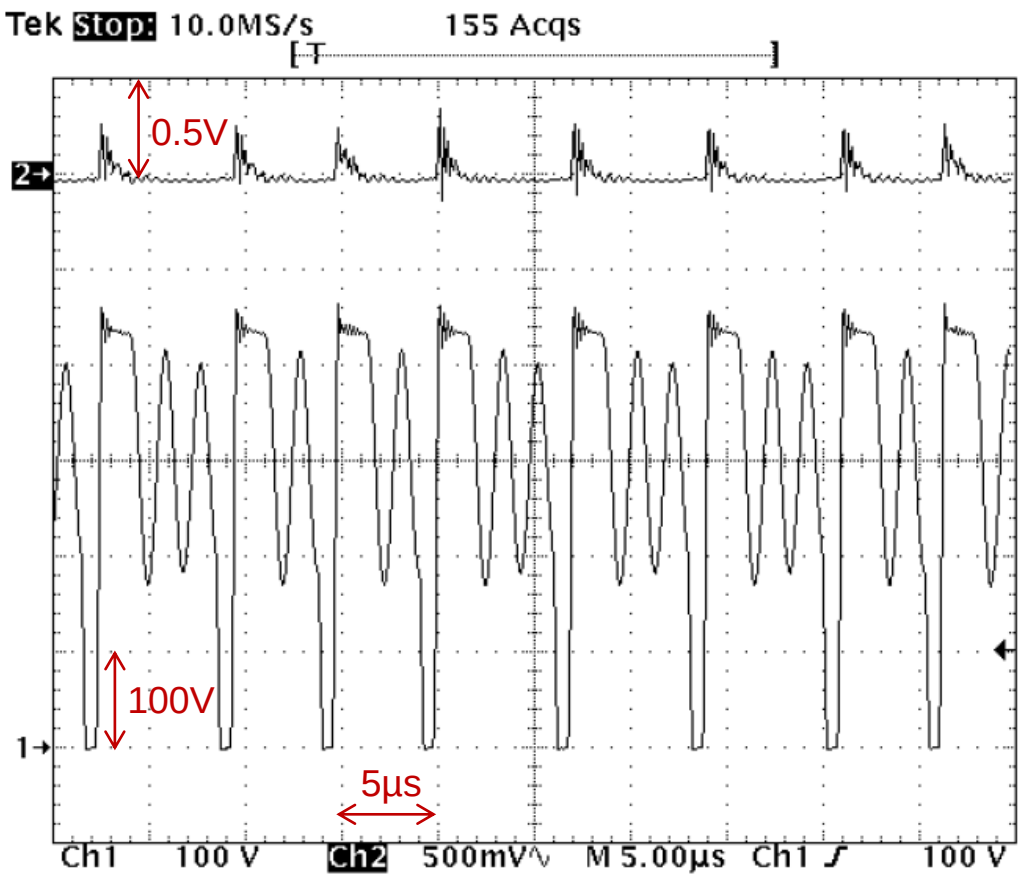

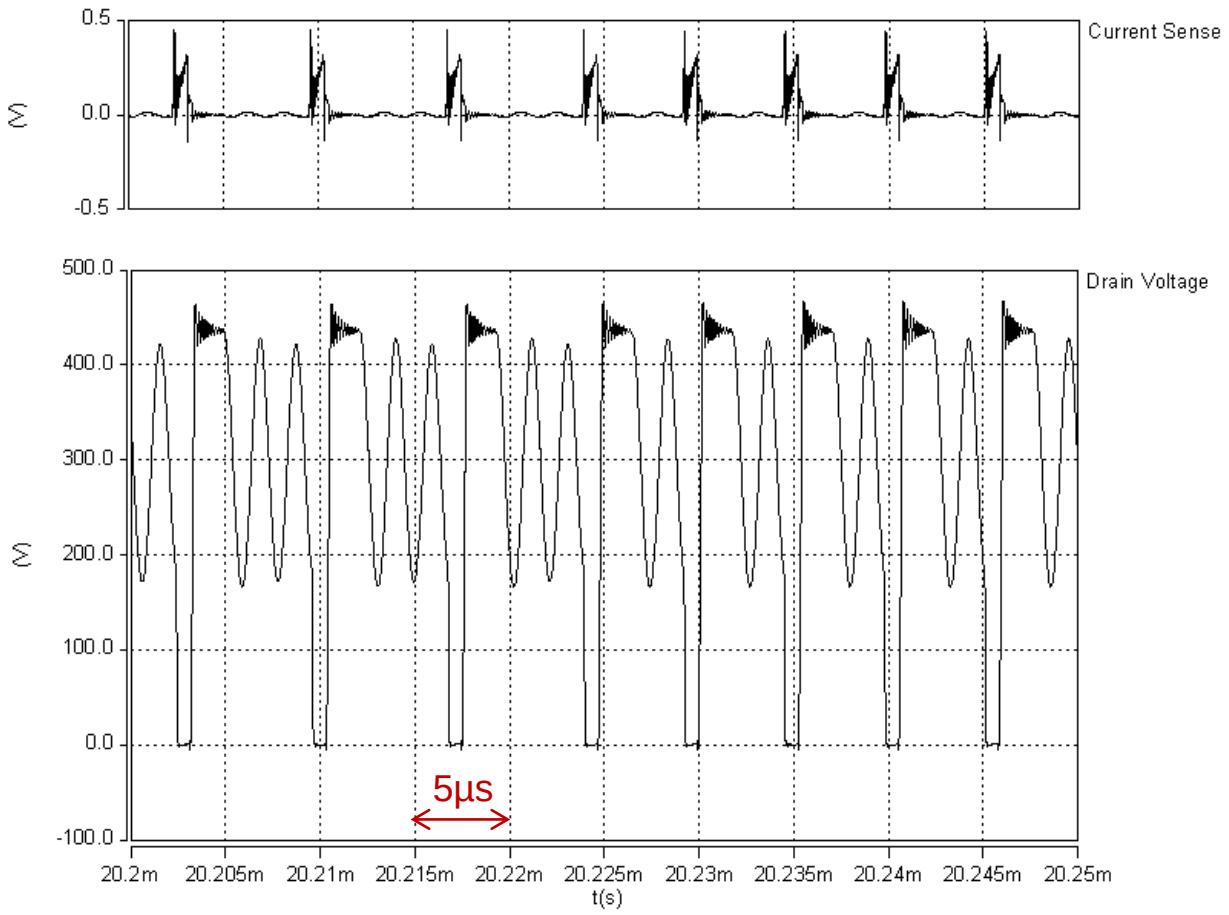

Ch1: Q1 drain voltage
Ch2: 105 V output

Current Sense and Primary Voltage

Standby, Vin = 380 V

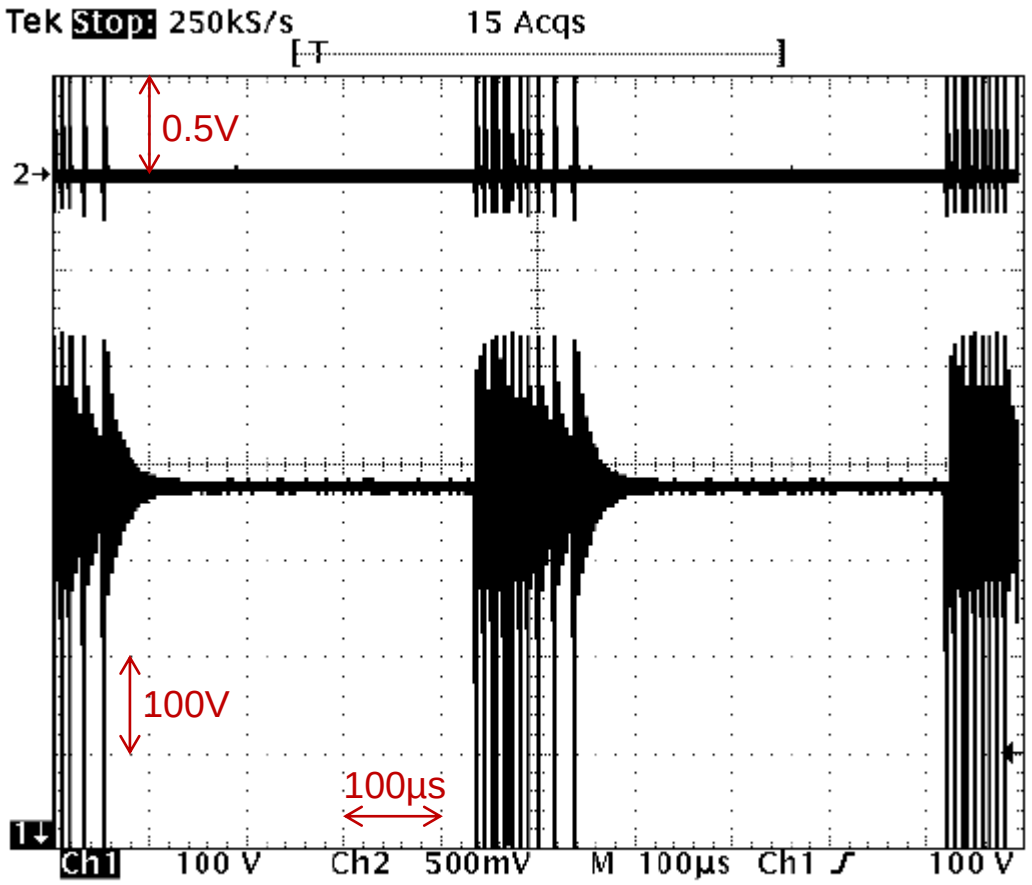

Ch1: Q1 drain voltage
Ch2: current sense pin

Burst Mode

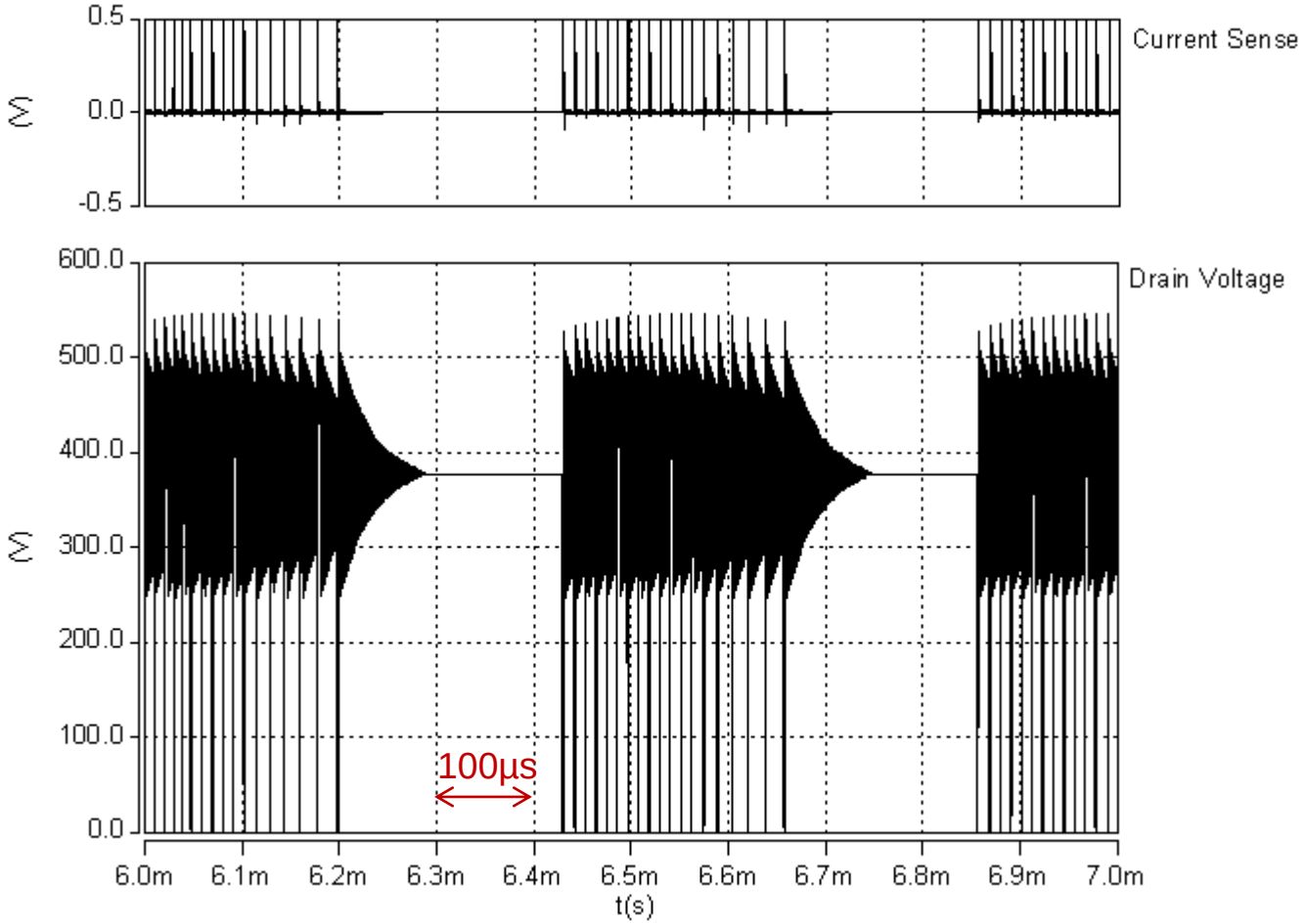

SYNOPSYS®

Agenda

- Quasi-Resonant Flyback Converter (AN1326)
  - Principles of Operation
  - Simulation vs. Measurement
- Accurate Datasheet-Driven Modeling
  - Controller Chip
  - MOSFET
  - Transformer
- Automated Verification
  - EMI
  - Loss / Efficiency

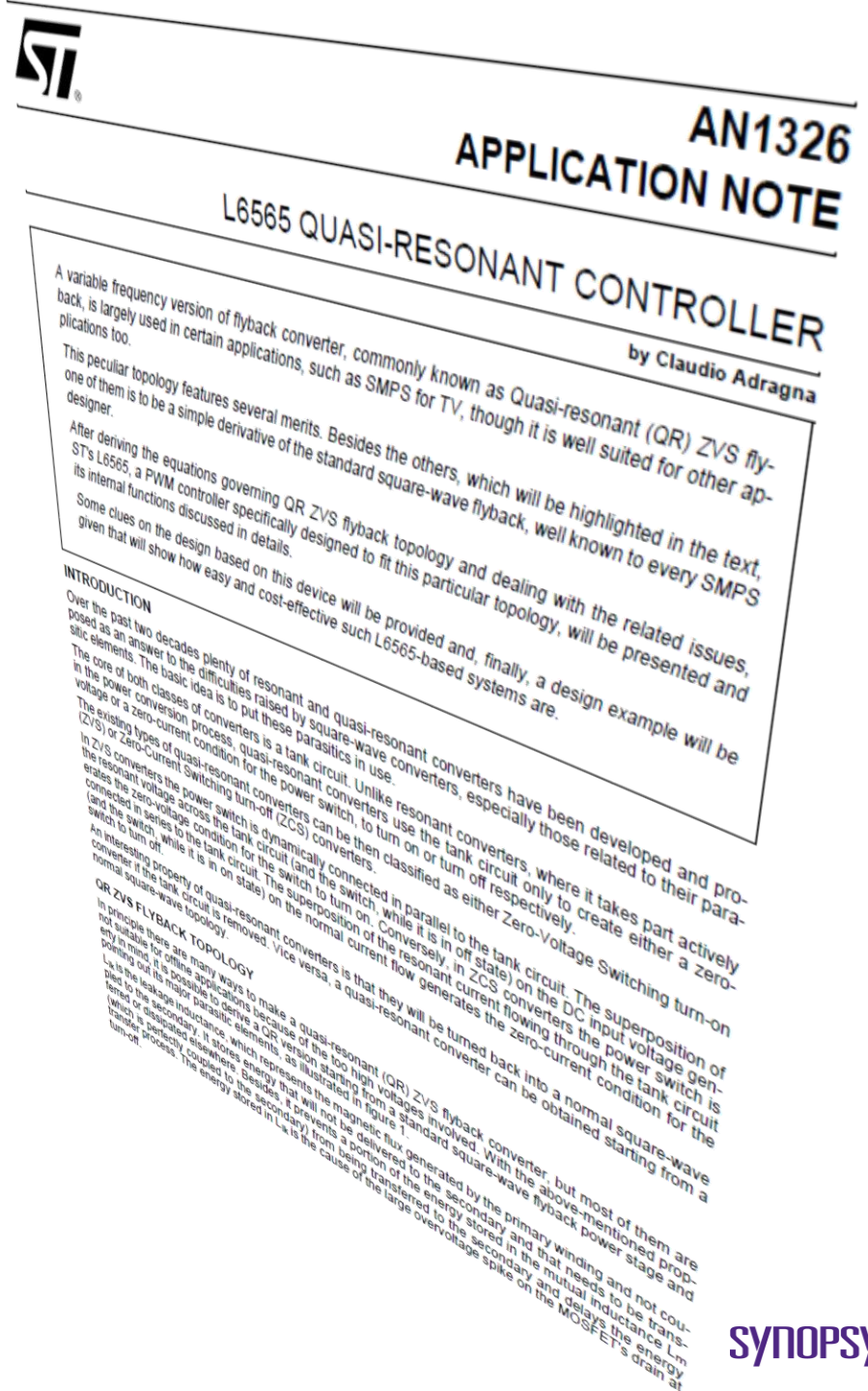

AN1326
APPLICATION NOTE

L6565 QUASI-RESONANT CONTROLLER

by Claudio Adragna

A variable frequency version of flyback converter, commonly known as Quasi-resonant (QR) ZVS fly-back, is largely used in certain applications, such as SMPS for TV, though it is well suited for other applications too.

This peculiar topology features several merits. Besides the others, which will be highlighted in the text, one of them is to be a simple derivative of the standard square-wave flyback, well known to every SMPS designer.

After deriving the equations governing QR ZVS flyback topology and dealing with the related issues, ST's L6565, a PWM controller specifically designed to fit this particular topology, will be presented and its internal functions discussed in details.

Some clues on the design based on this device will be provided and, finally, a design example will be given that will show how easy and cost-effective such L6565-based systems are.

INTRODUCTION

Over the past two decades plenty of resonant and quasi-resonant converters have been developed and proposed as an answer to the difficulties raised by square-wave converters, especially those related to their parasitic elements. The basic idea is to put these parasitics in use.

The core of both classes of converters is a tank circuit. Unlike resonant converters, where it takes part actively in the power conversion process, quasi-resonant converters use the tank circuit only to create either a zero-voltage or a zero-current condition for the power switch, to turn on or turn off respectively.

The existing types of quasi-resonant converters can be then classified as either Zero-Voltage Switching turn-on (ZVS) or Zero-Current Switching turn-off (ZCS) converters.

In ZVS converters the power switch is dynamically connected in parallel to the tank circuit. The superposition of the resonant voltage across the tank circuit (and the switch), while it is in off state) on the DC input voltage generates the zero-voltage condition for the switch to turn on. Conversely, in ZCS converters the power switch is connected in series to the tank circuit. The superposition of the resonant current flowing through the tank circuit (and the switch, while it is in on state) on the normal current flow generates the zero-current condition for the switch to turn off.

An interesting property of quasi-resonant converters is that they will be turned back into a normal square-wave converter if the tank circuit is removed. Vice versa, a quasi-resonant converter can be obtained starting from a normal square-wave topology.

QR ZVS FLYBACK TOPOLOGY

In principle there are many ways to make a quasi-resonant (QR) ZVS flyback converter, but most of them are not suitable for offline applications because of the too high voltages involved. With the above-mentioned property in mind it is possible to derive a QR version starting from a standard square-wave flyback power stage and pointing out its major parasitic elements, as illustrated in figure 1.

L_m is the magnetic flux generated by the primary winding and not coupled to the secondary. It stores energy that will not be delivered to the secondary and that needs to be transferred or dissipated elsewhere. Besides, it prevents a portion of the energy stored in the mutual inductance (L_m) (which is perfectly coupled to the secondary) from being transferred to the secondary and delays the energy transfer process. The energy stored in L_m is the cause of the large overvoltage spike on the MOSFET's drain at turn-off.

Modeling
Controller IC

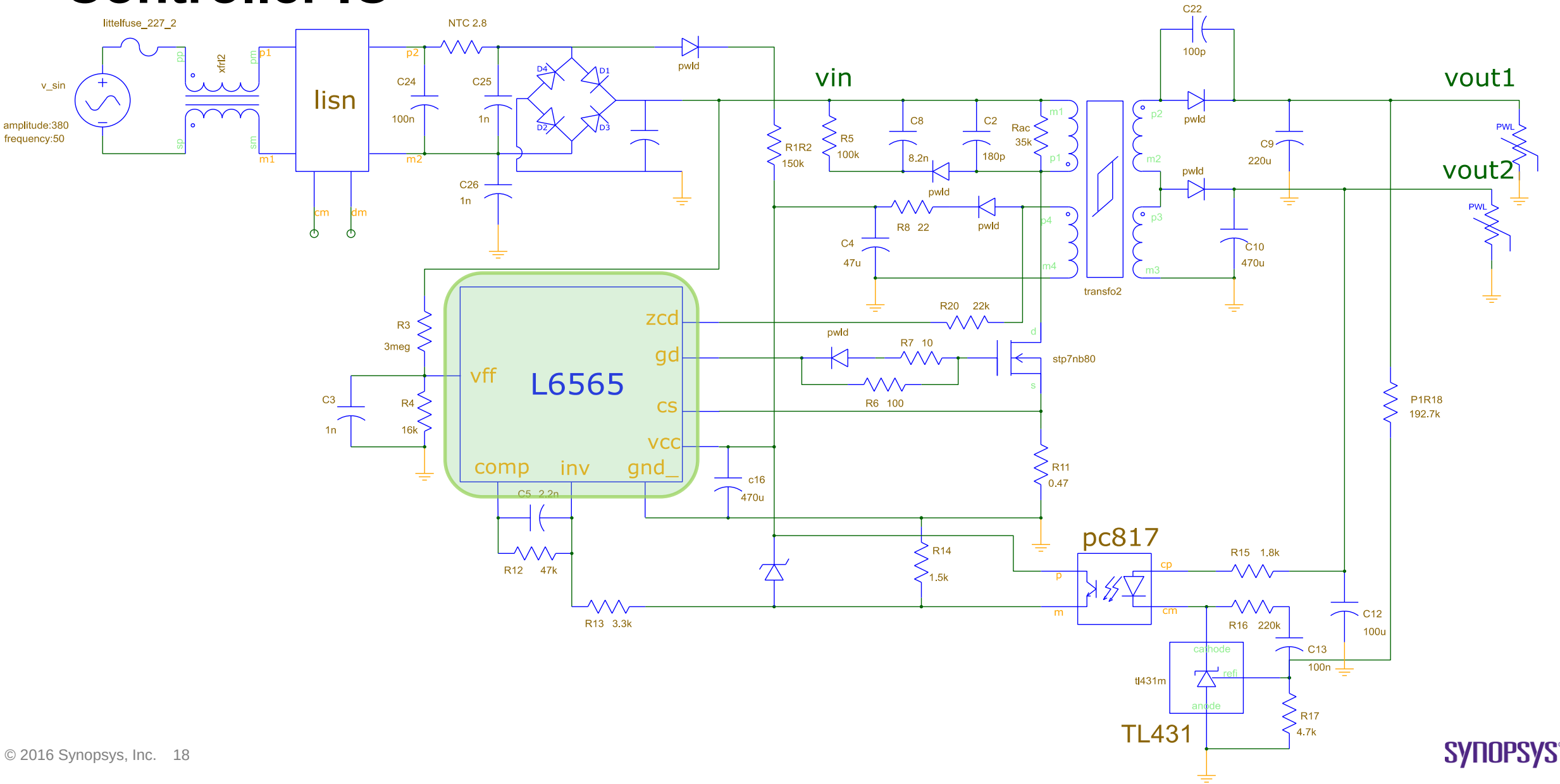

Modeling
Controller IC

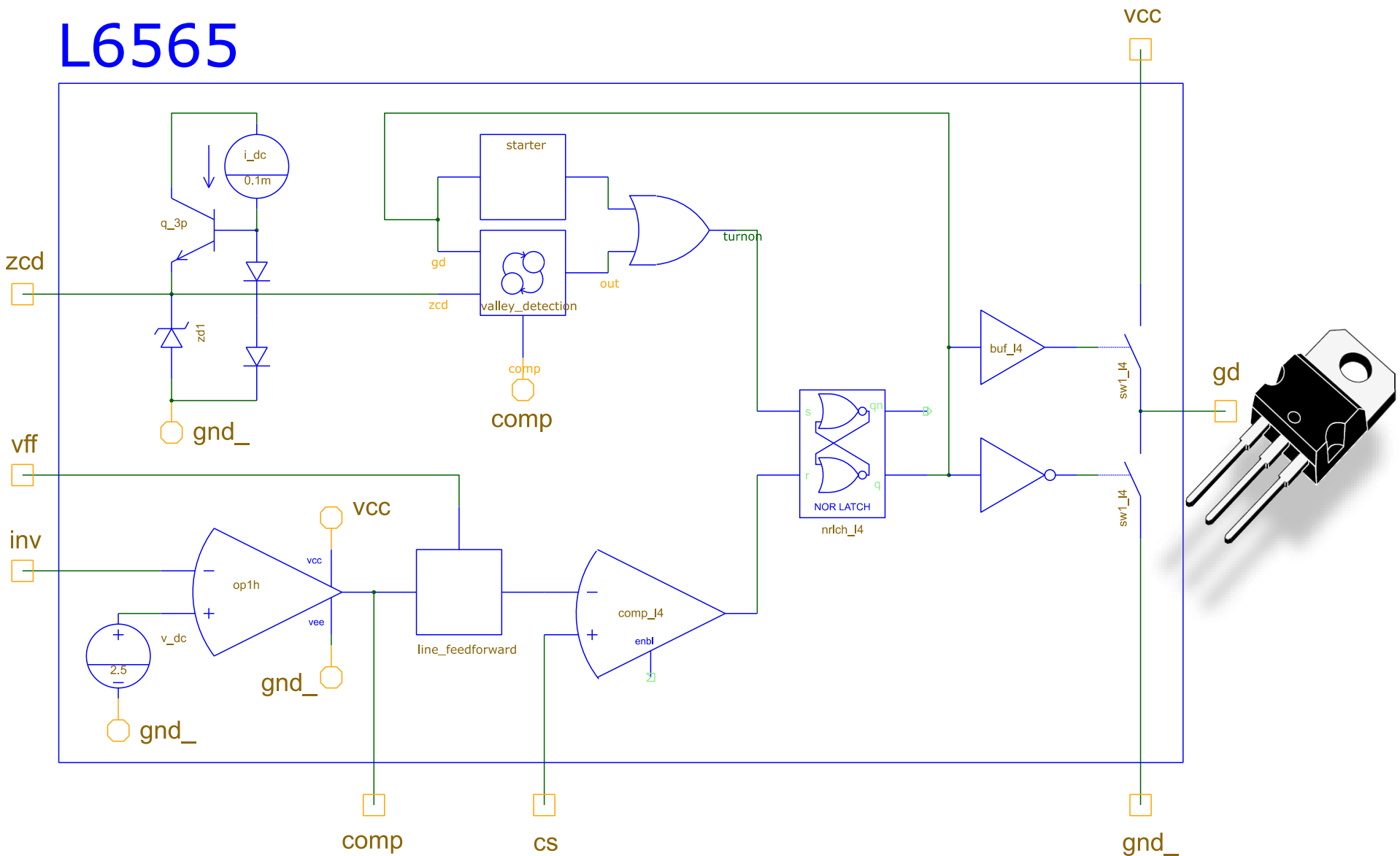

Modeling
Controller IC

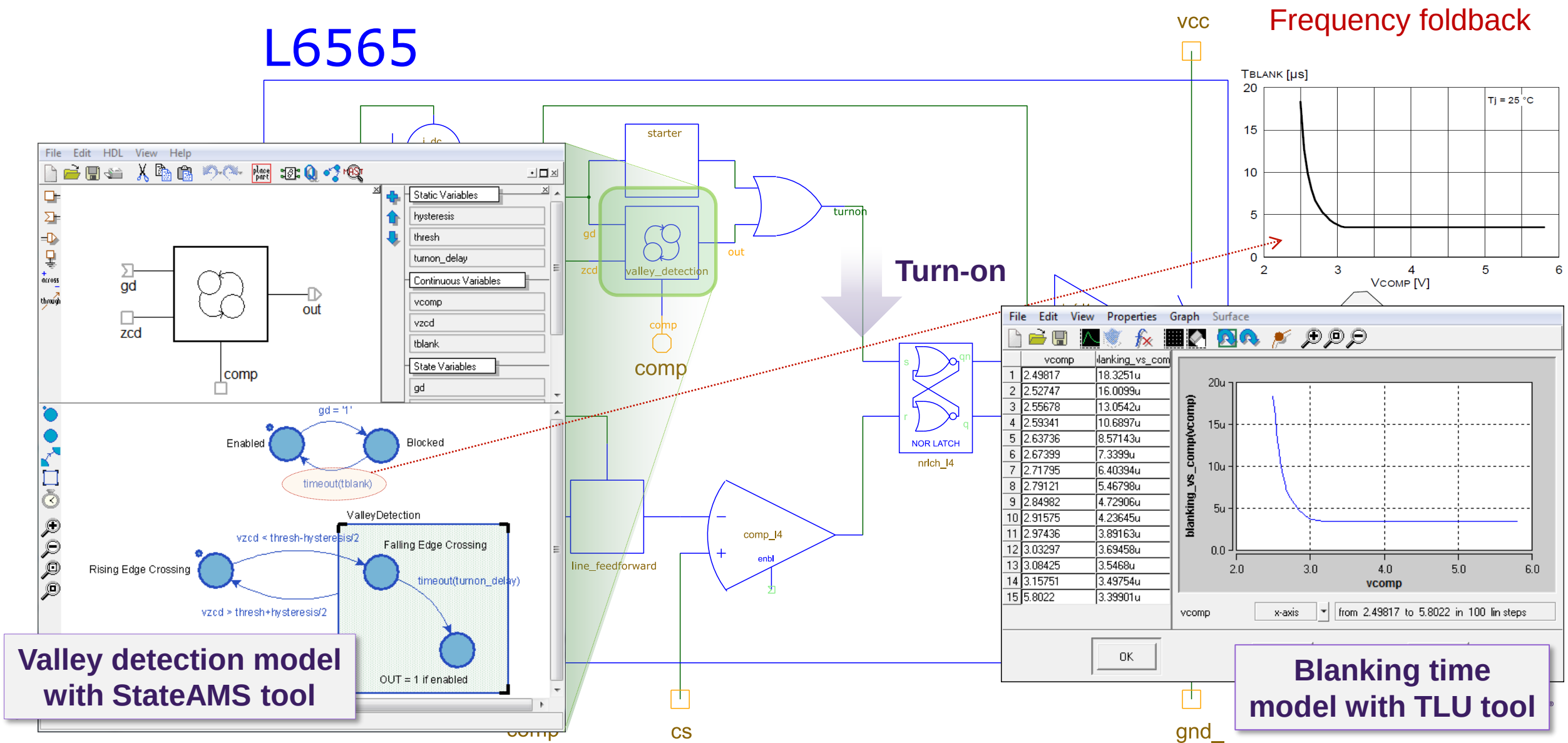

Modeling
Controller IC

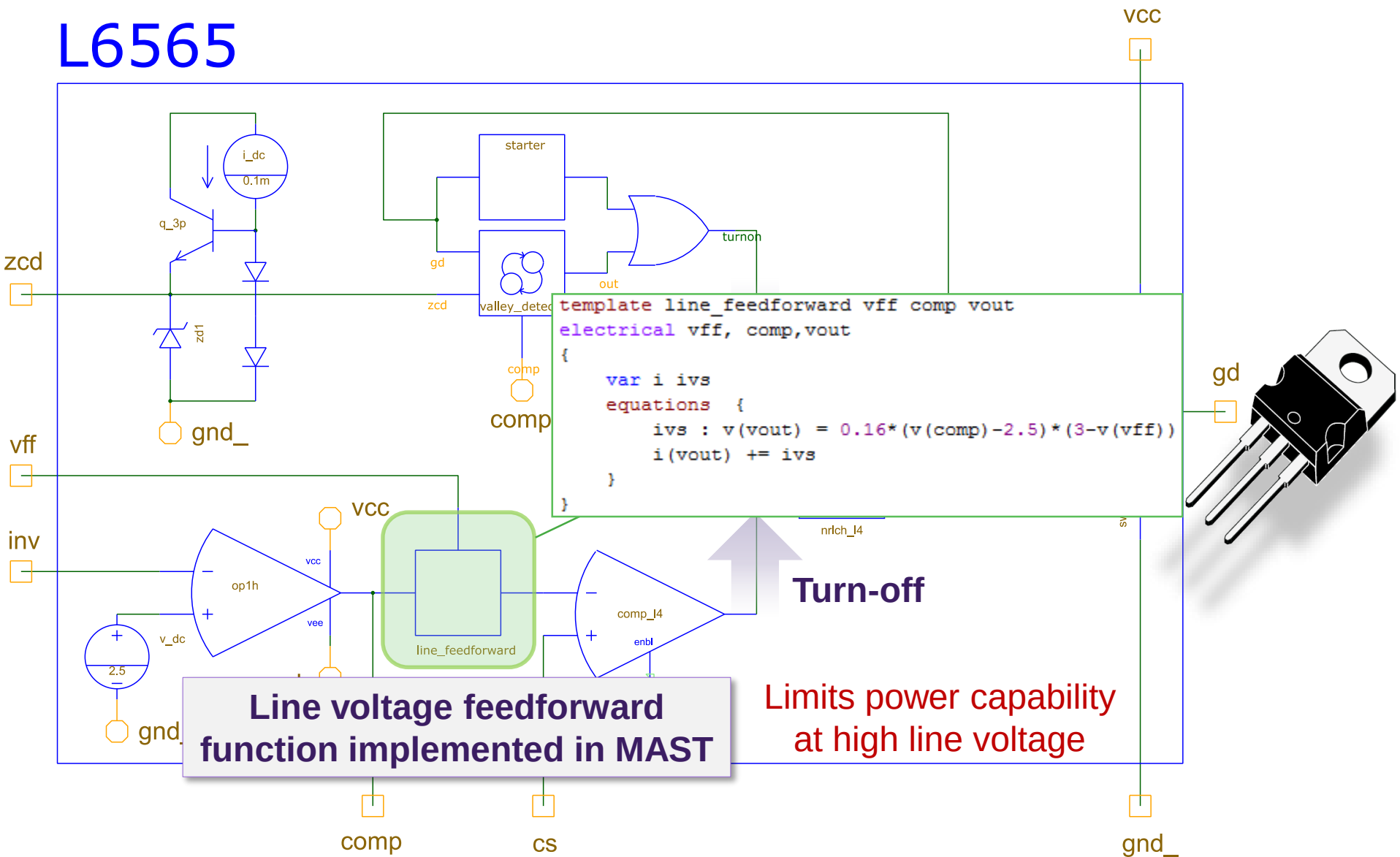

Modeling
Power MOSFET

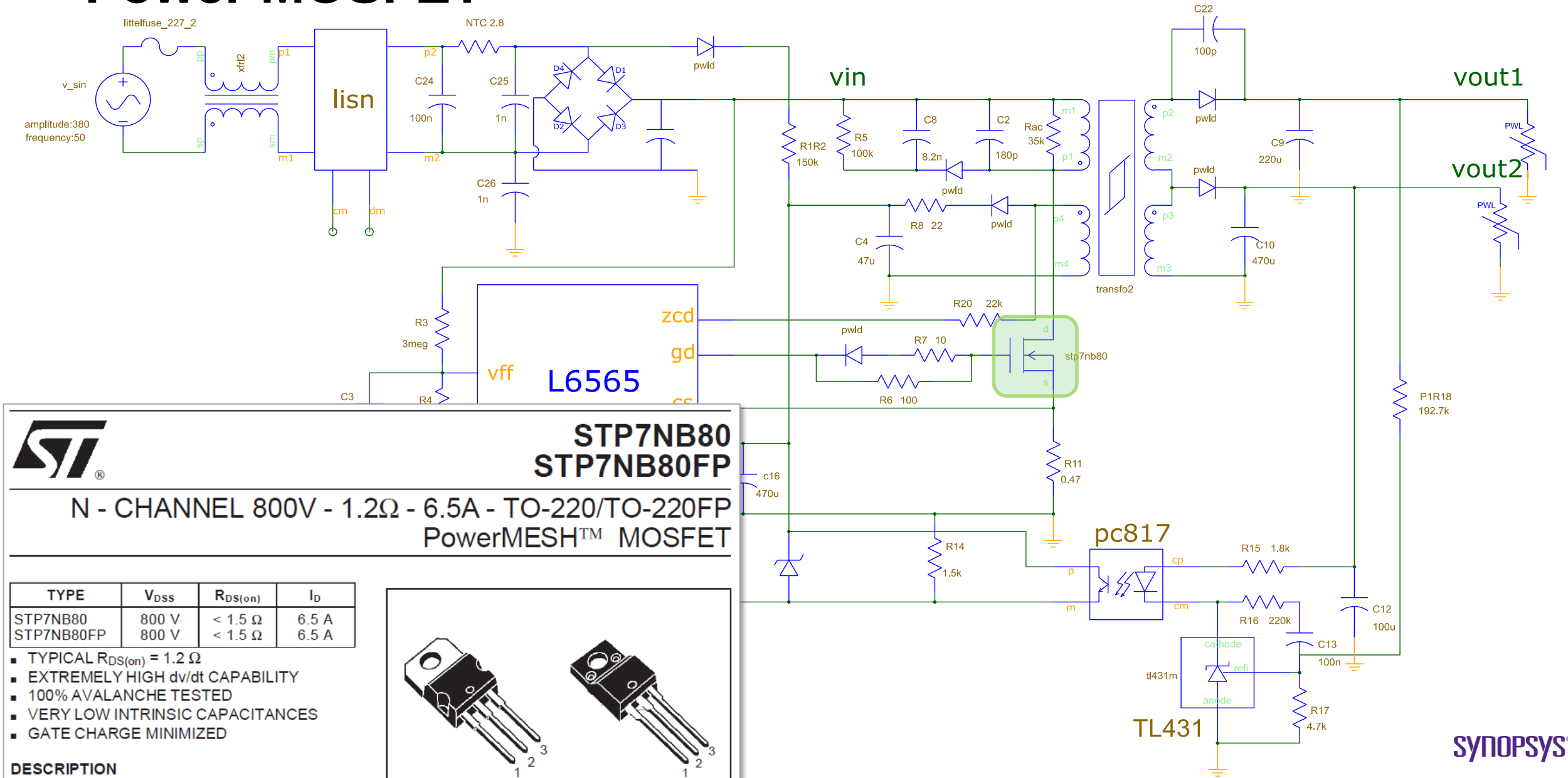

STP7NB80
STP7NB80FP

N - CHANNEL 800V - 1.2Ω - 6.5A - TO-220/TO-220FP
PowerMESH™ MOSFET

TYPE	V_{DSS}	$R_{DS(on)}$	I_D
STP7NB80	800 V	< 1.5 Ω	6.5 A
STP7NB80FP	800 V	< 1.5 Ω	6.5 A

- TYPICAL $R_{DS(on)}$ = 1.2 Ω
- EXTREMELY HIGH dv/dt CAPABILITY
- 100% AVALANCHE TESTED
- VERY LOW INTRINSIC CAPACITANCES
- GATE CHARGE MINIMIZED

DESCRIPTION

Modeling
Power MOSFET

- DC Characteristics

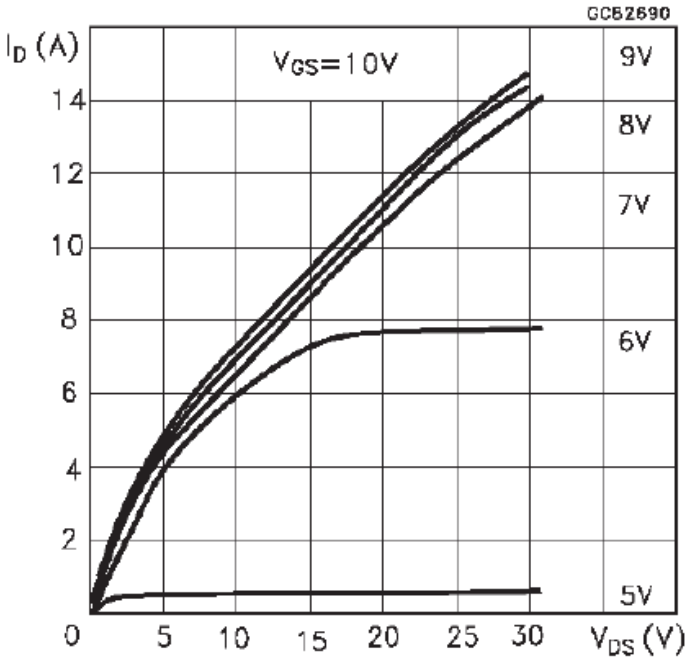

Characterized Temperatures

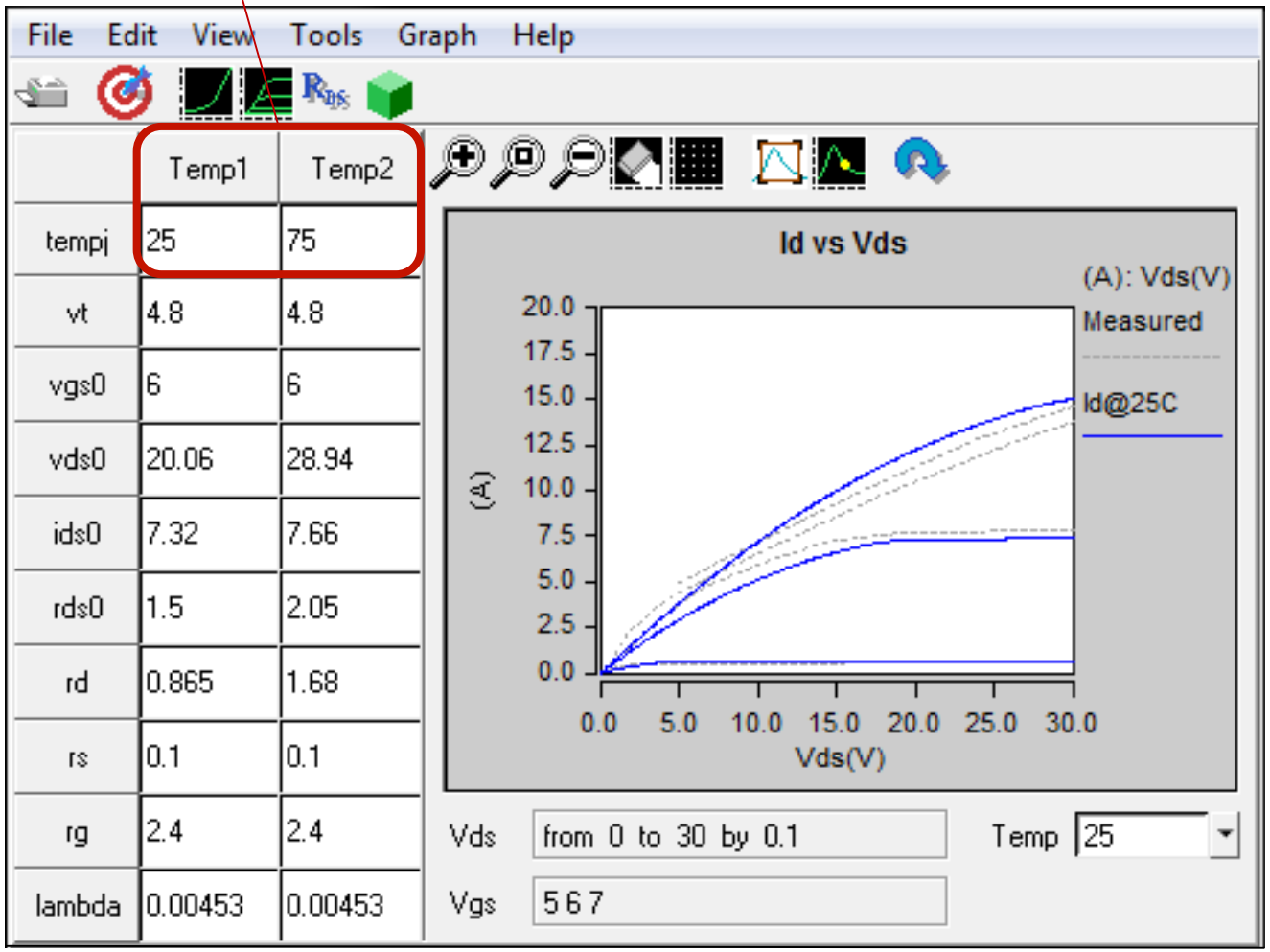

Modeling
Power MOSFET

- DC Characteristics
- Interelectrode Capacitances

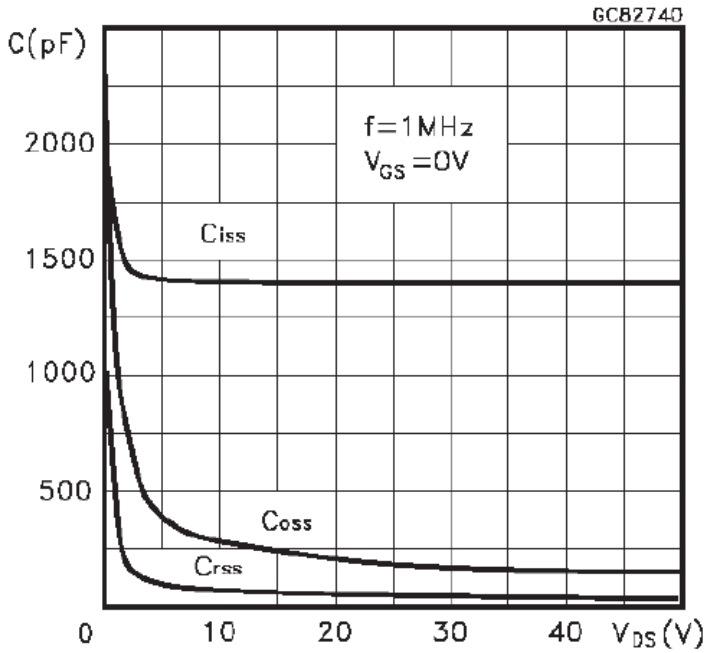

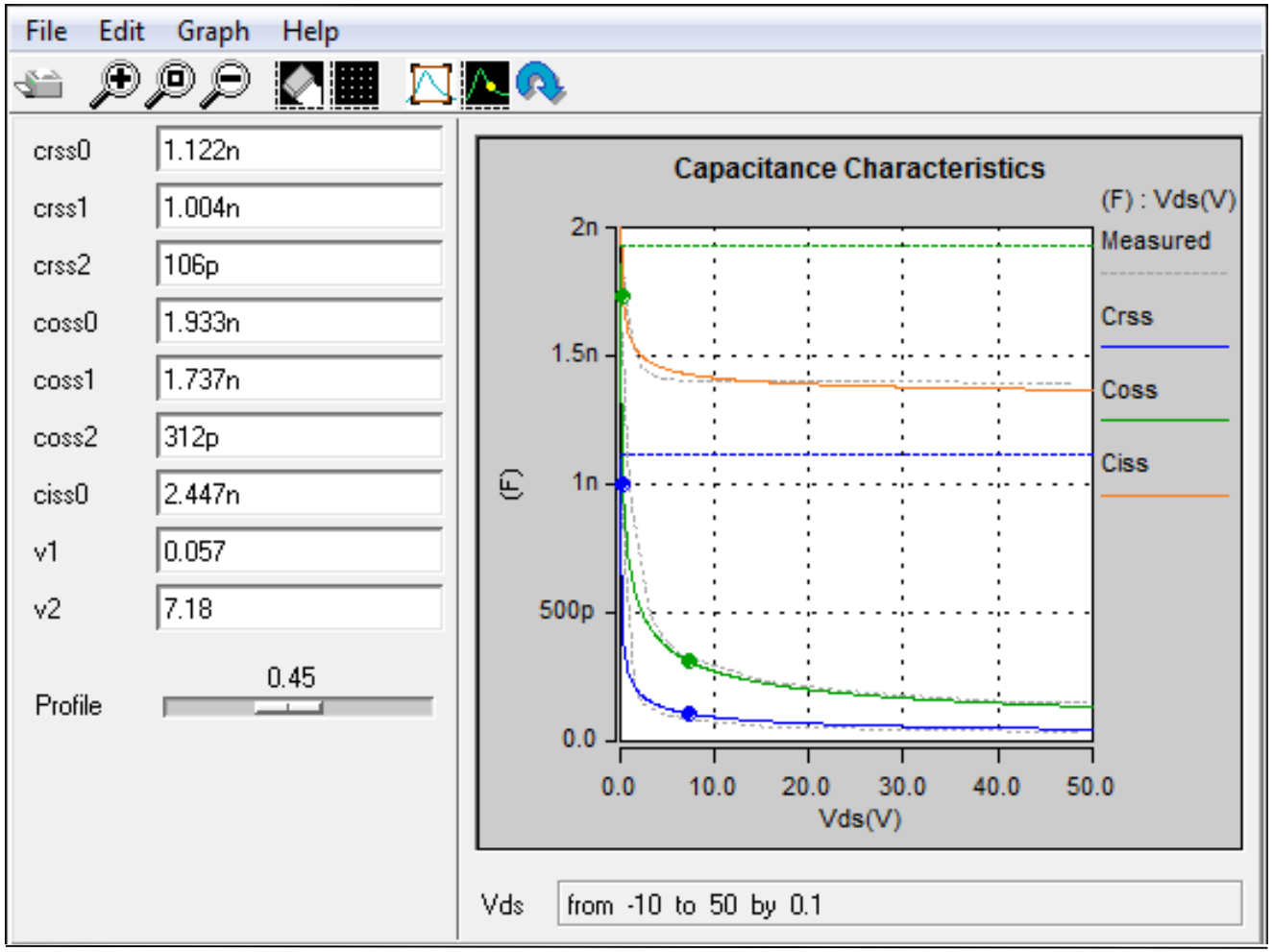

Modeling
Power MOSFET

- DC Characteristics
- Interelectrode Capacitances
- Gate Charge Characteristic

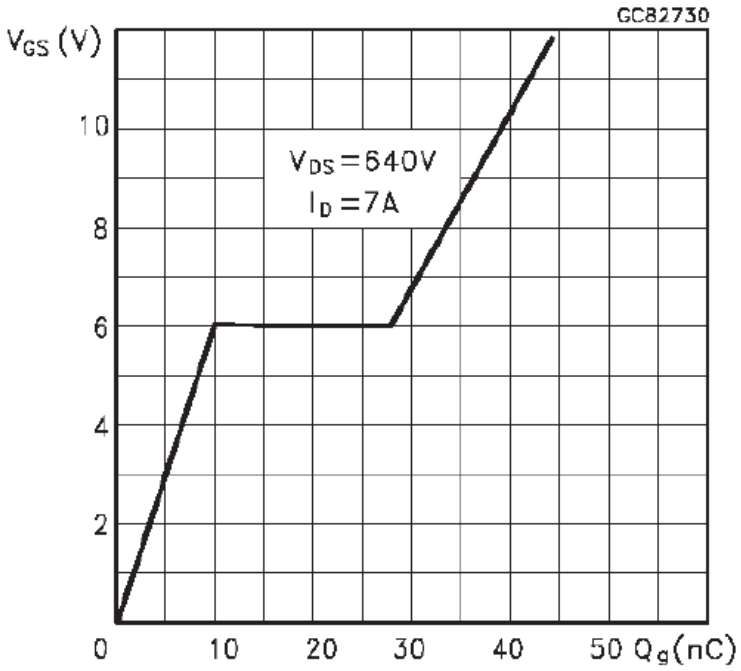

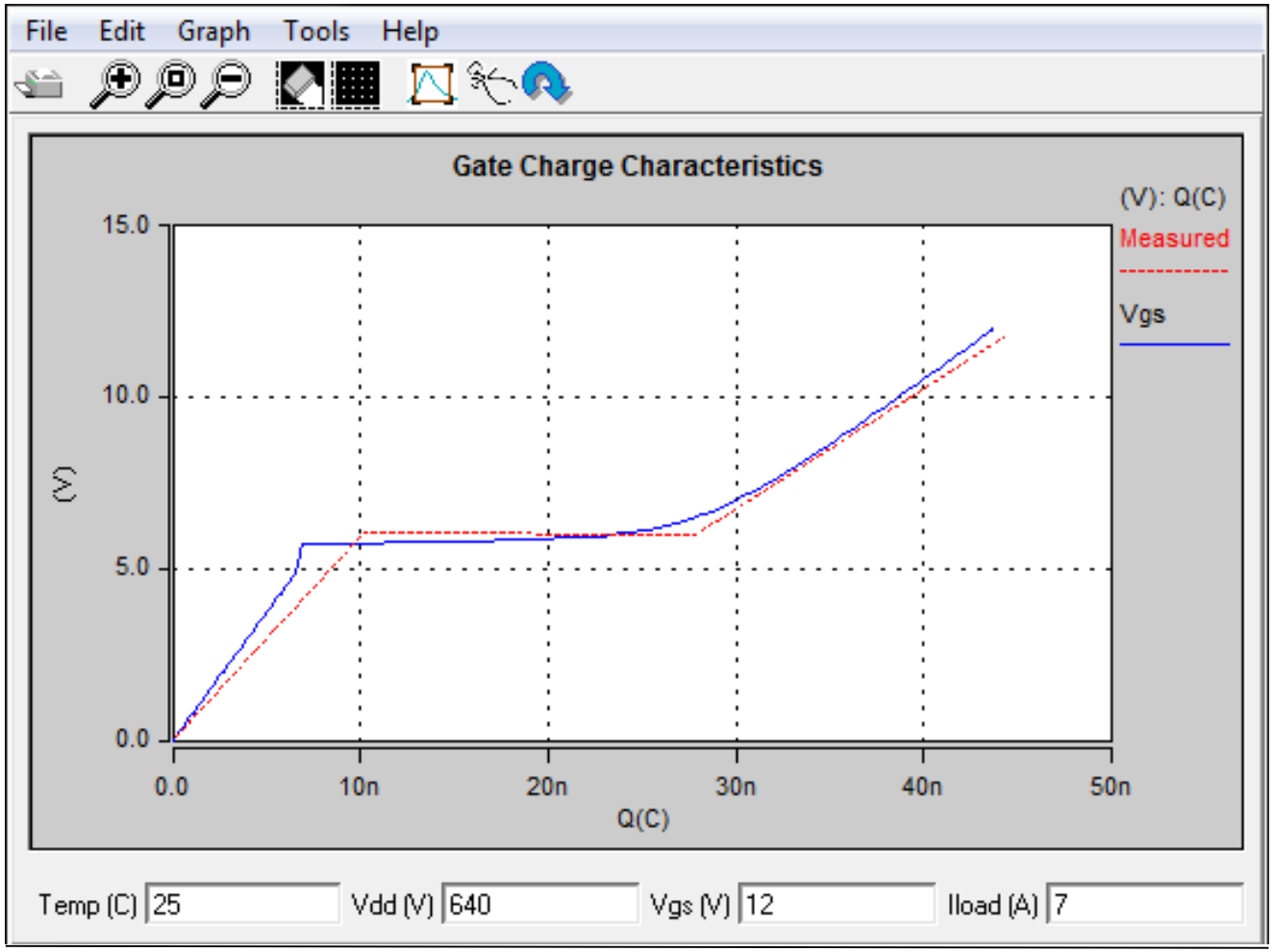

Modeling
Transformer

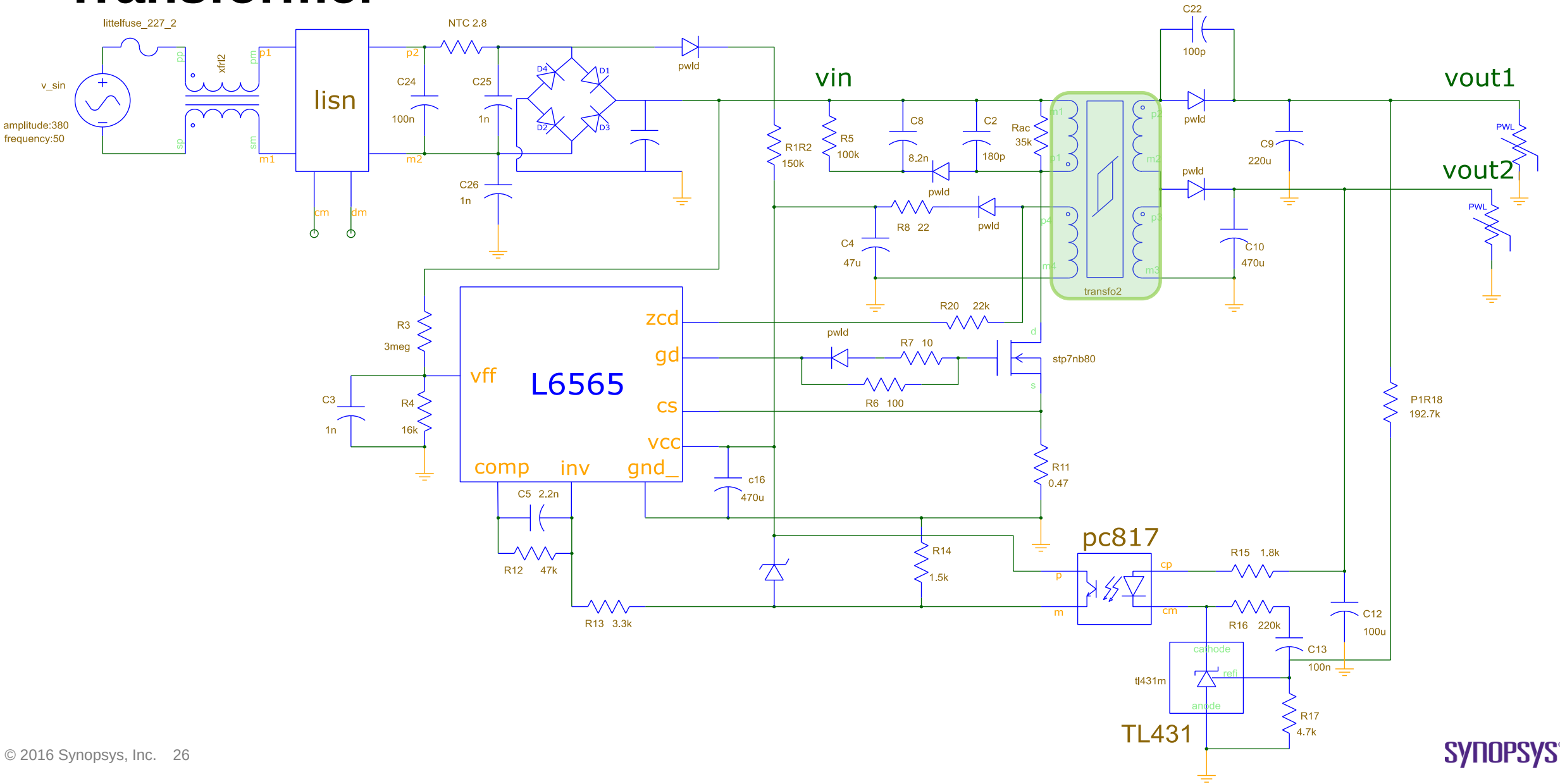

Modeling
Transformer

- Ferrite Core 3C85
  - Hysteresis (major and minor BH loops)
  - Frequency dependent losses (hysteresis and eddy currents)

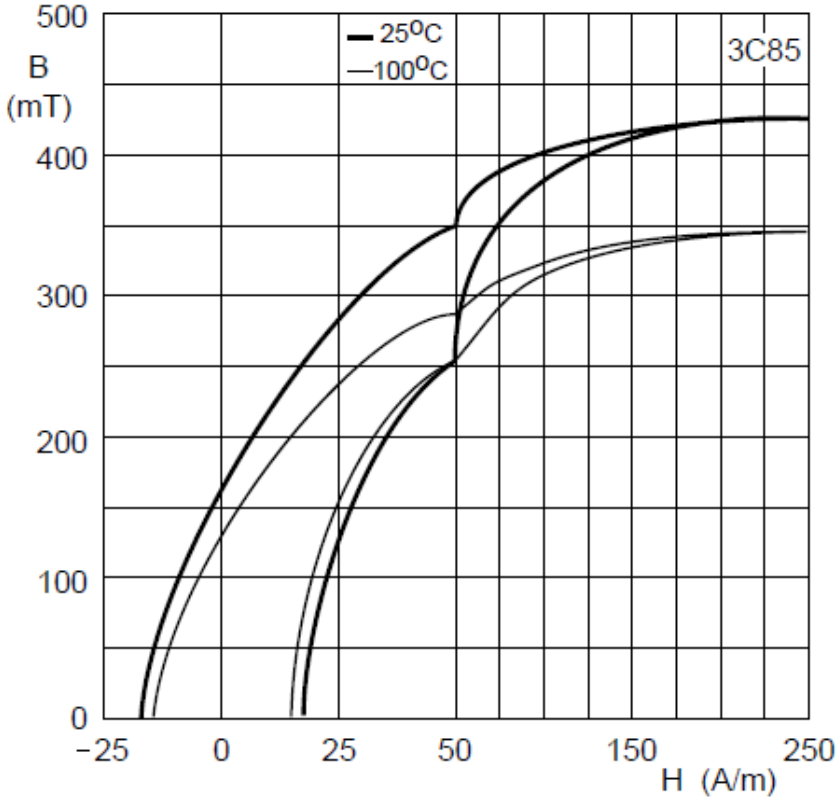

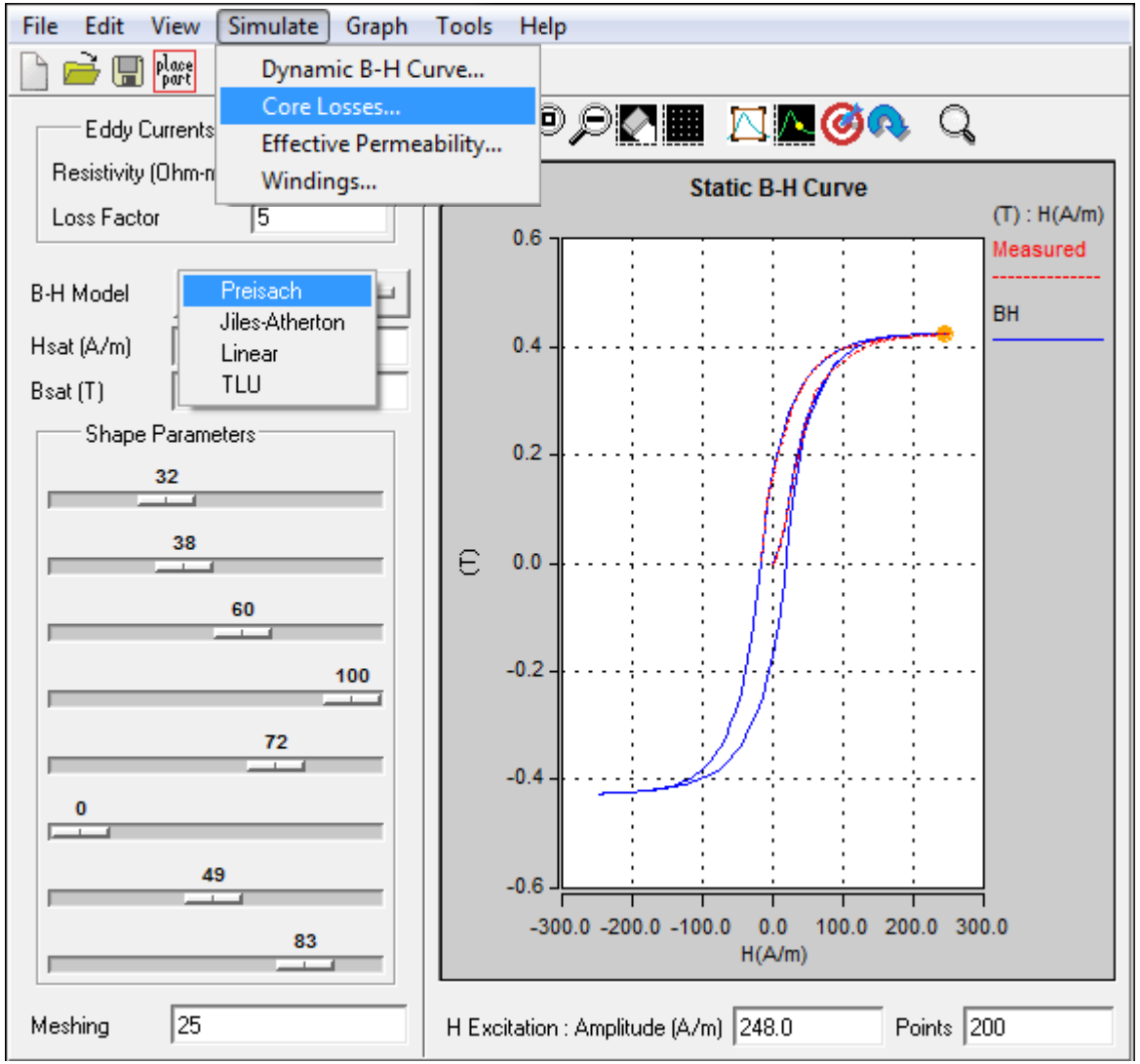

Modeling
Transformer

- Ferrite Core 3C85
  - Hysteresis (major and minor BH loops)
  - Frequency dependent losses (hysteresis and eddy currents)

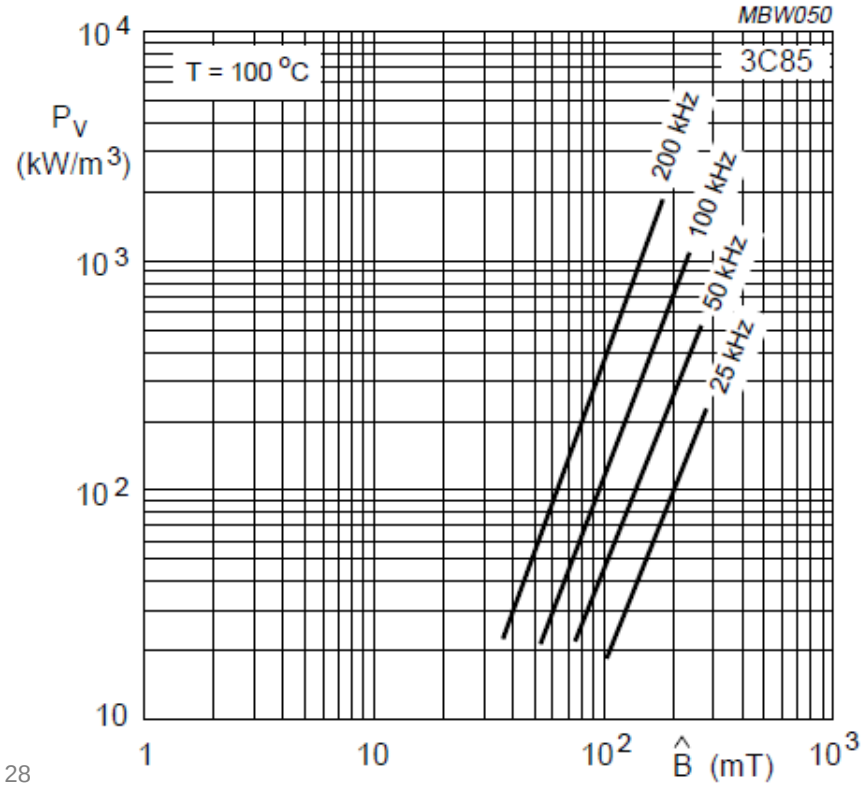

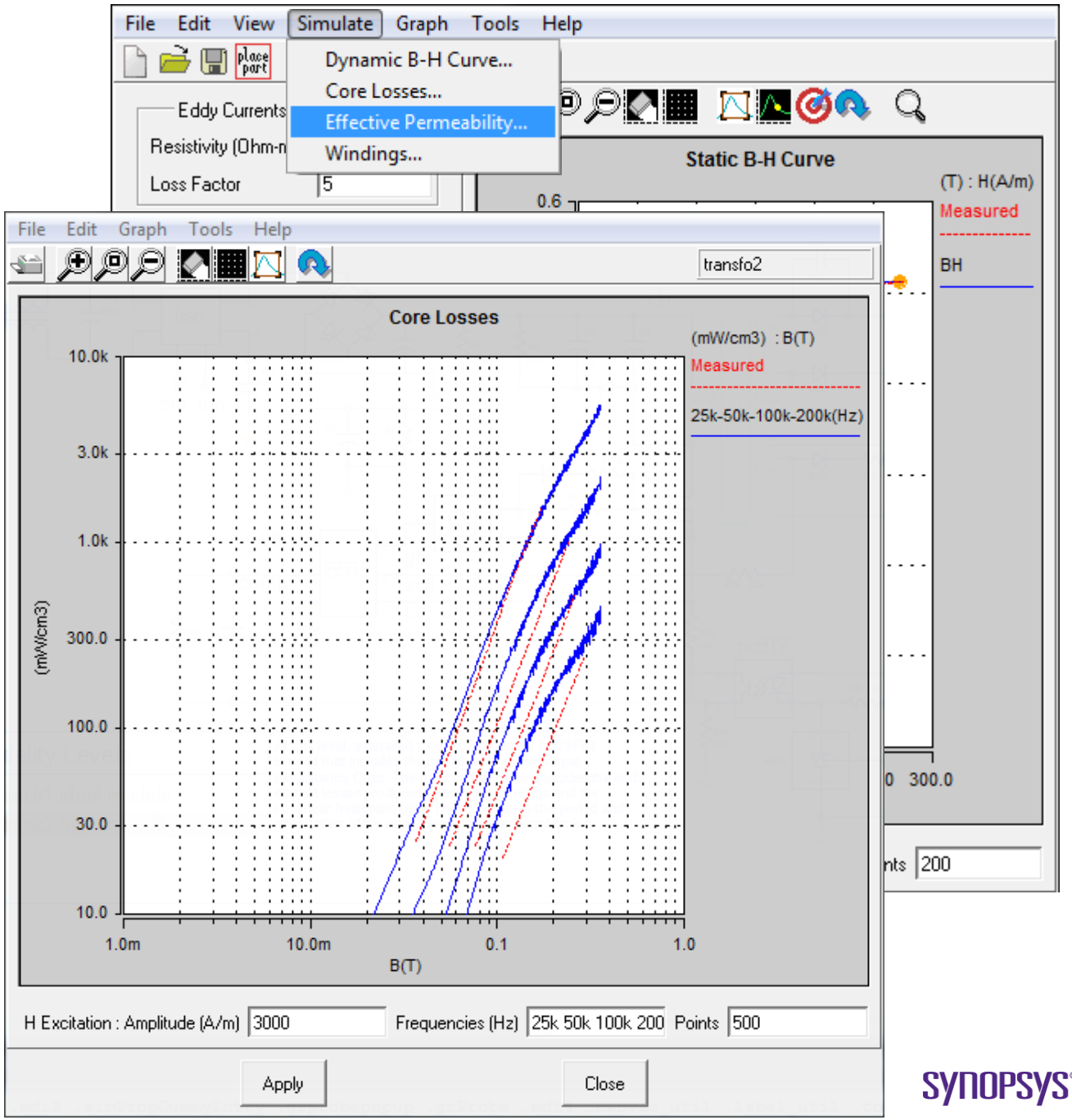

Modeling
Transformer

- Ferrite Core 3C85
  - Hysteresis (major and minor BH loops)
  - Frequency dependent losses (hysteresis and eddy currents)

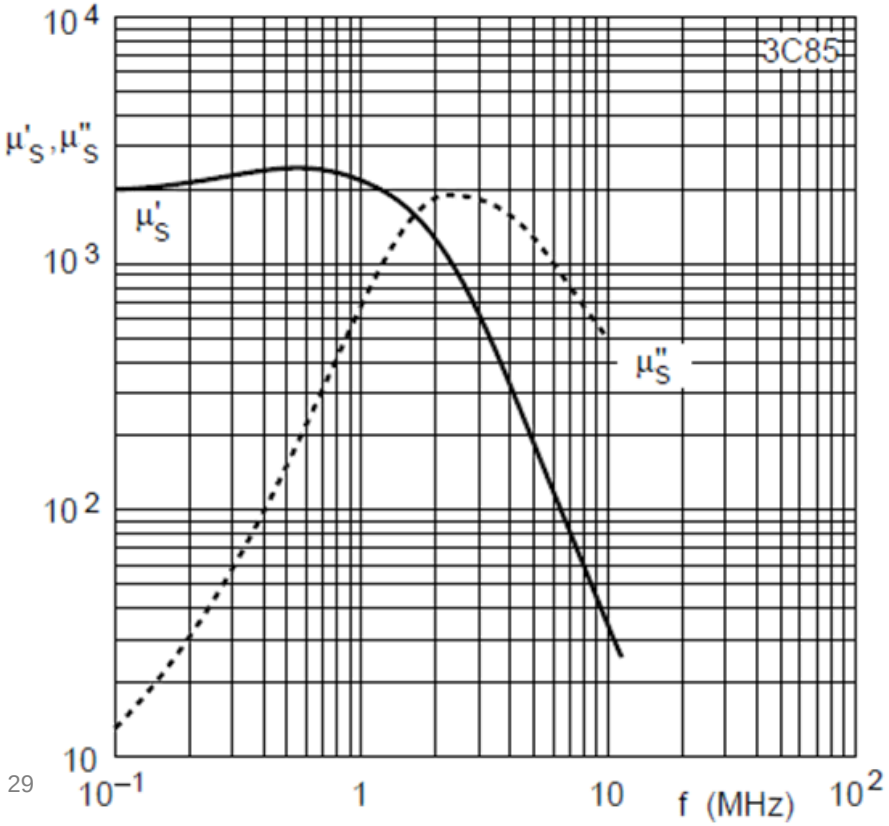

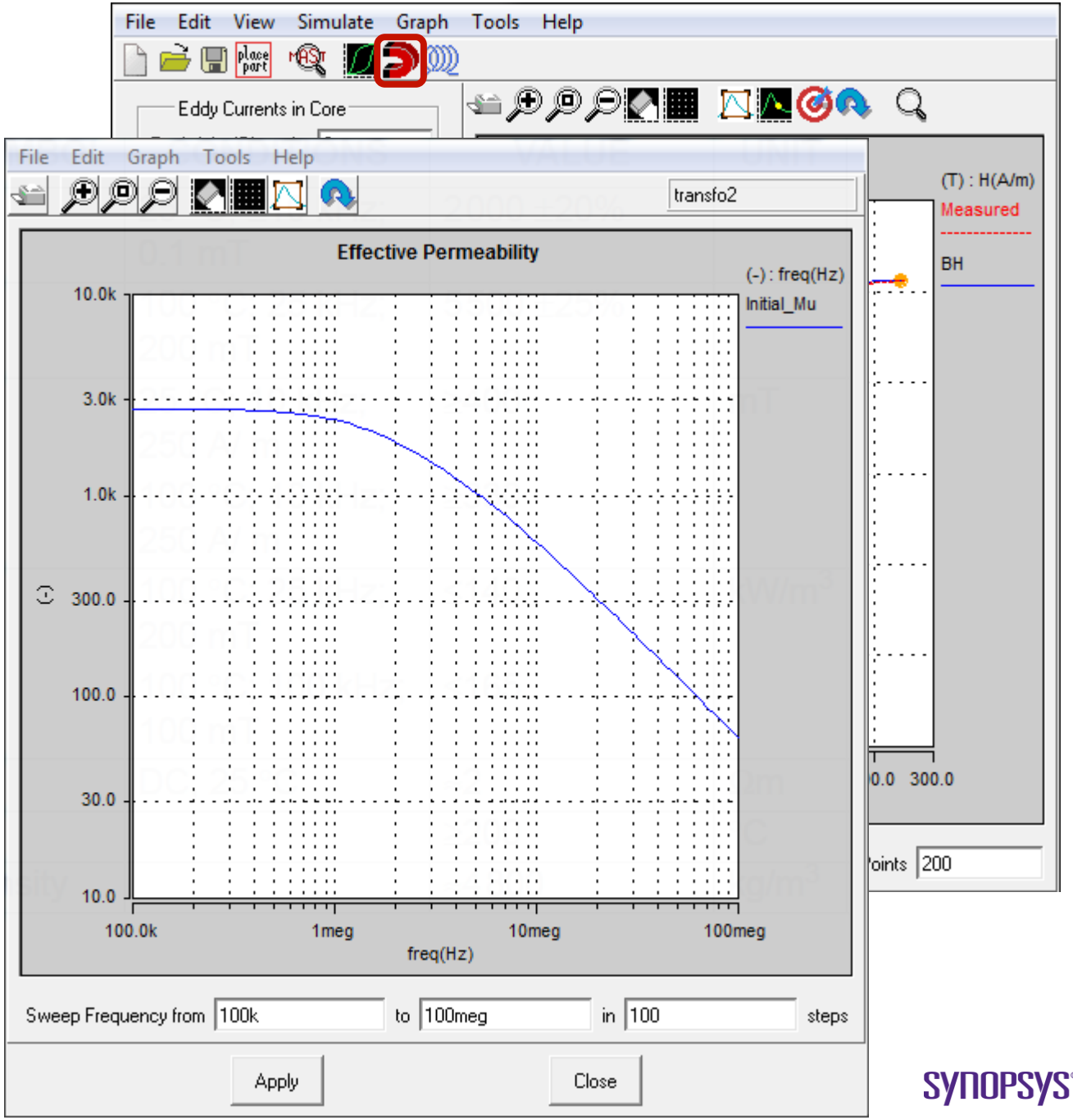

Modeling
Transformer

- Ferrite Core 3C85
  - Hysteresis (major and minor BH loops)
  - Frequency dependent losses (hysteresis and eddy currents)
- Core geometry
  - Air gap
  - Lamination

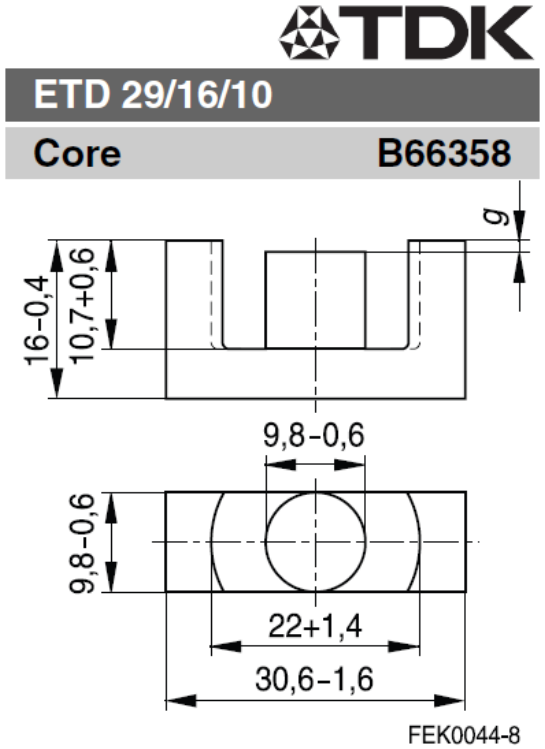

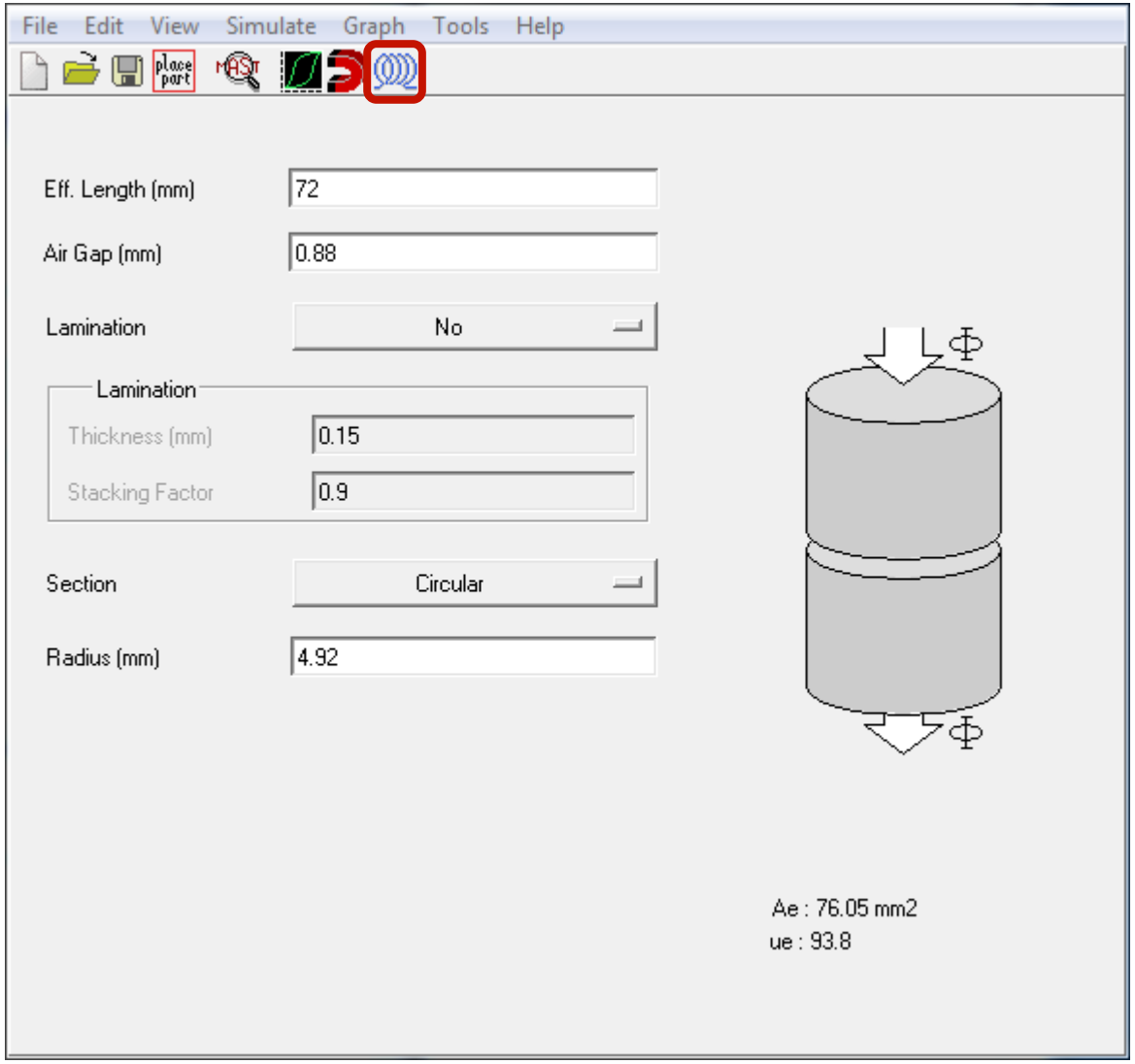

Modeling
Transformer

- Ferrite Core 3C85
  - Hysteresis (major and minor BH loops)
  - Frequency dependent losses (hysteresis and eddy currents)
- Core geometry
  - Air gap
  - Lamination
- Windings (Cauer - 1D Model)
  - Flux leakage
  - Frequency dependent loss (skin and proximity effects)
  - Winding capacitances

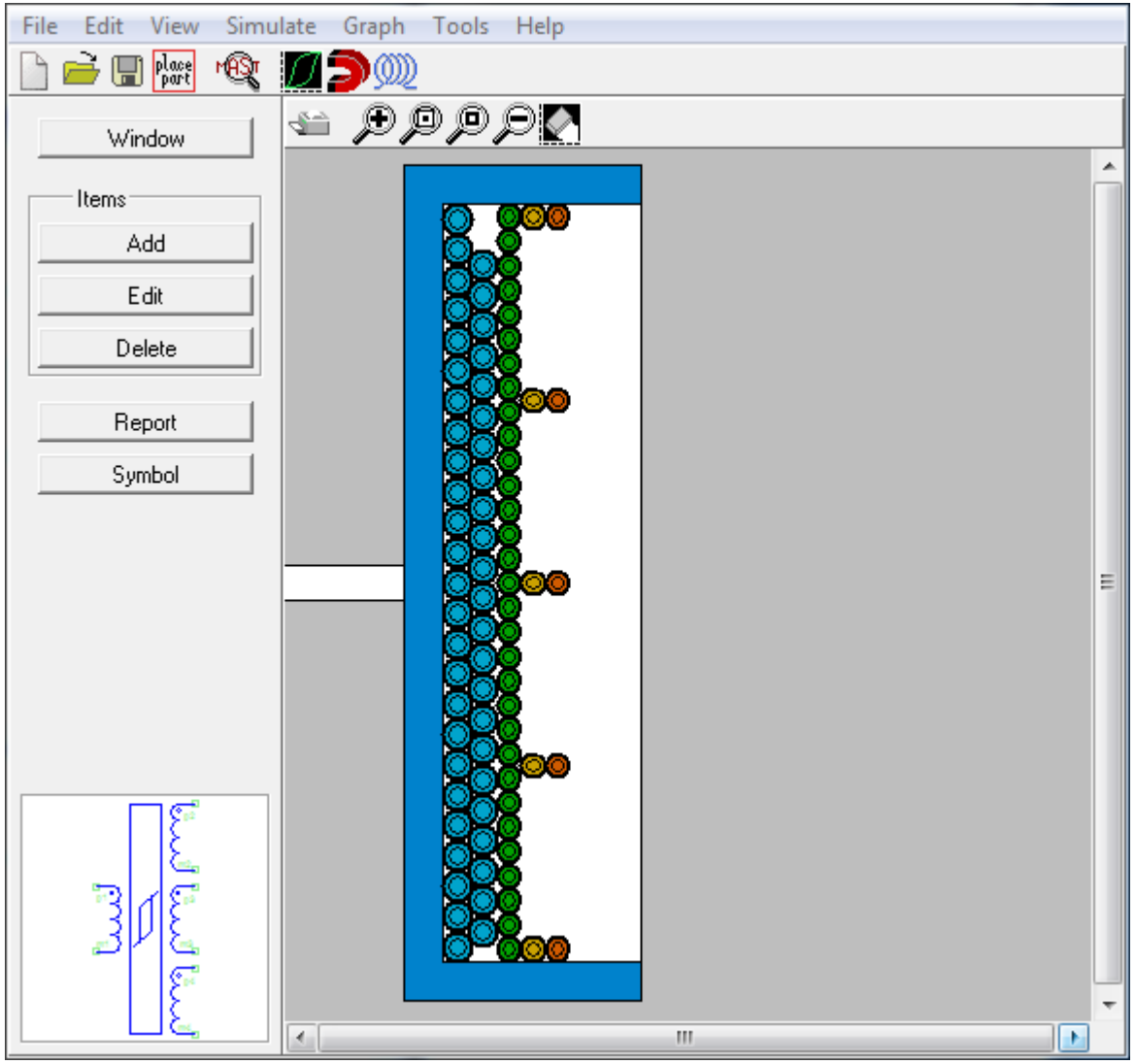

Modeling
Transformer

- Ferrite Core 3C85
  - Hysteresis (major and minor BH loops)
  - Frequency dependent losses (hysteresis and eddy currents)
- Core geometry
  - Air gap
  - Lamination
- Windings (Cauer - 1D Model)
  - Flux leakage
  - Frequency dependent loss (skin and proximity effects)
  - Winding capacitances

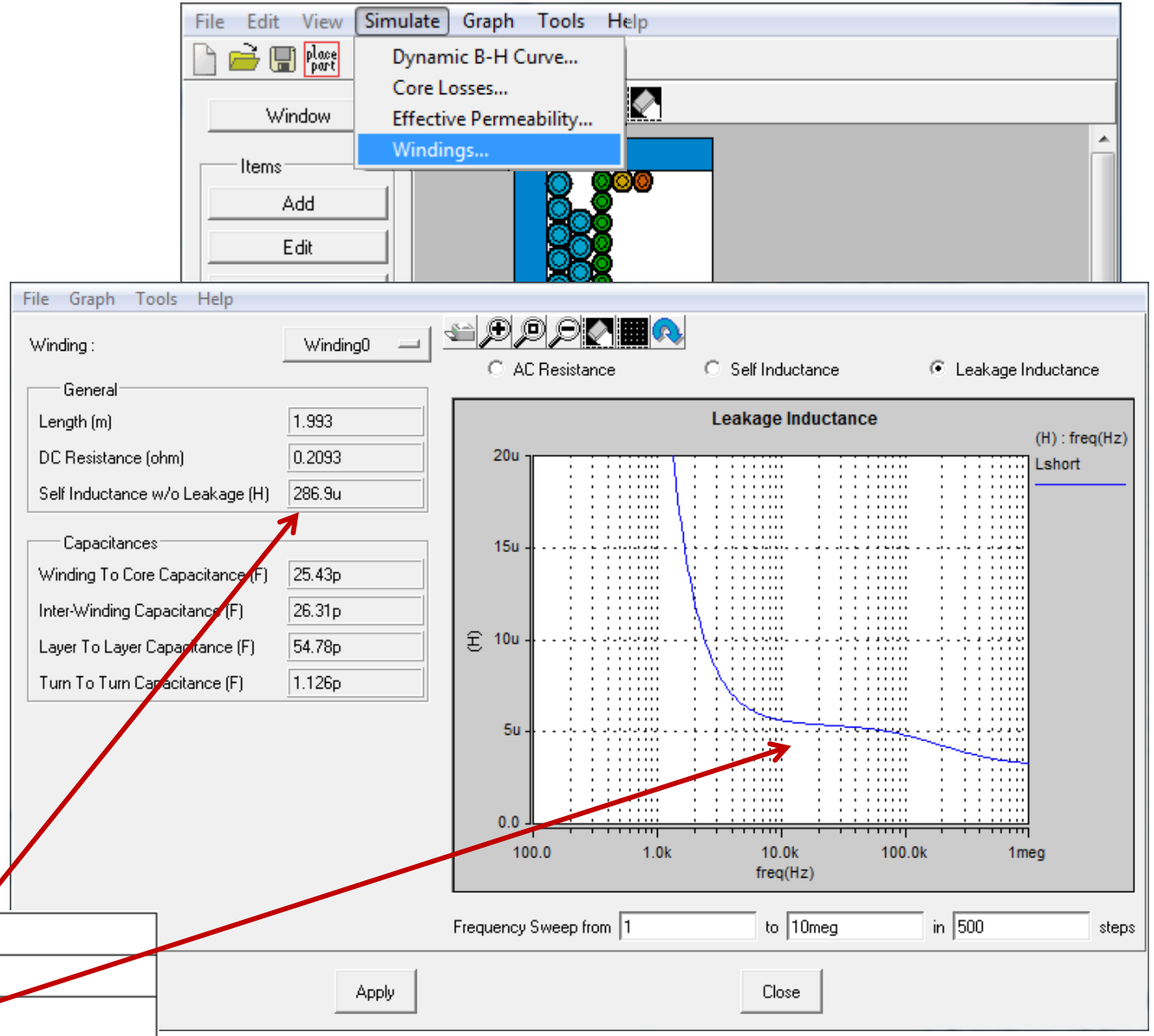

Core	ETD29/16/10, N67 Material or 3C85 or equivalent					
Bobbin	Horizontal mounting, 14 pins					
Air gap	≈ 1 mm for an inductance 1-3 of 285 µH					
Leakage inductance	< 8 µH					
Windings	Pin Start/End	Winding	Voltage	Wire	Turns	Notes

SYNOPSYS®

Agenda

- Quasi-Resonant Flyback Converter (AN1326)
  - Principles of Operation
  - Simulation vs. Measurement
- Accurate Datasheet-Driven Modeling
  - Controller Chip
  - MOSFET
  - Transformer
- Automated Verification
  - EMI
  - Loss / Efficiency

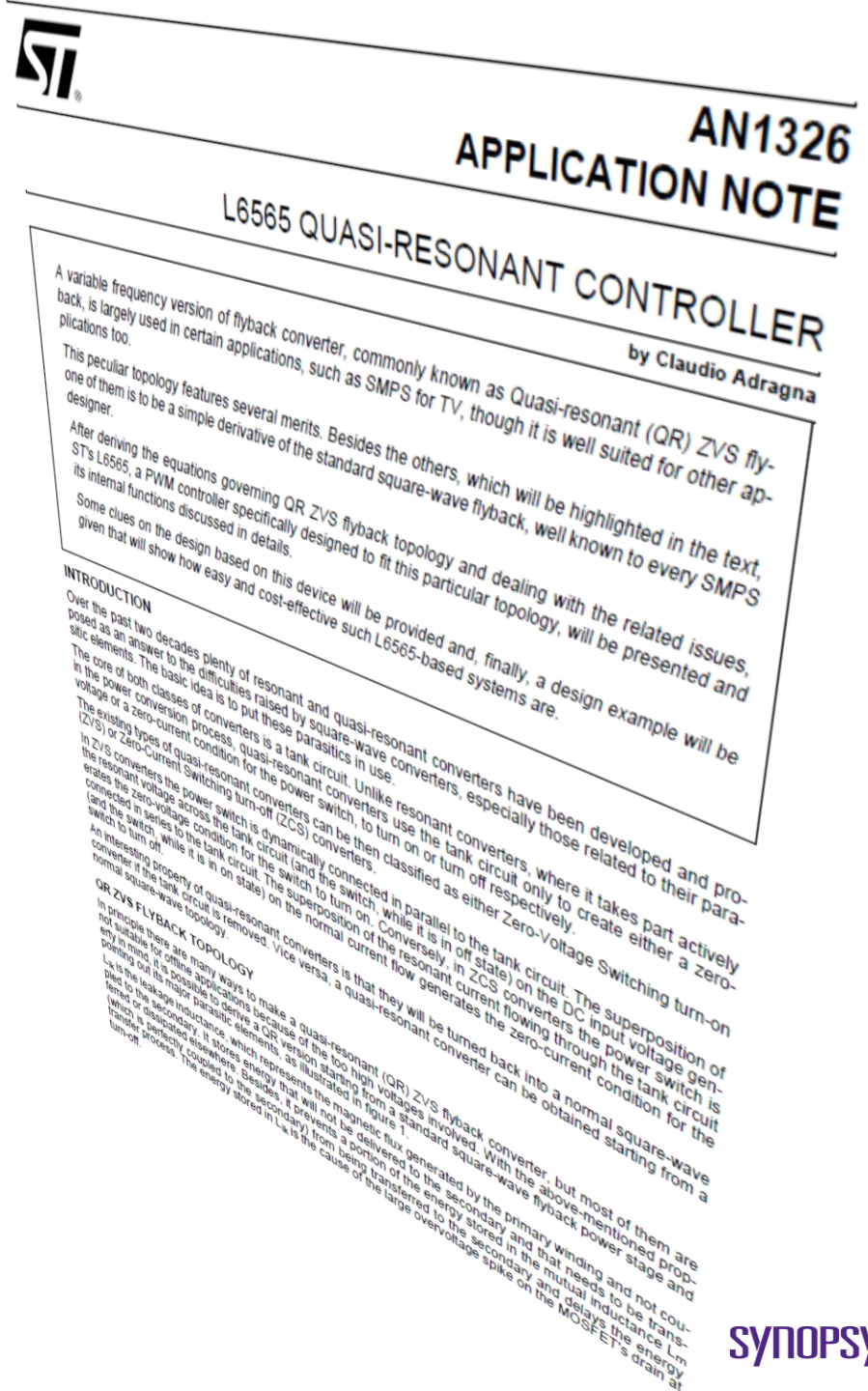

AN1326
APPLICATION NOTE

L6565 QUASI-RESONANT CONTROLLER

by Claudio Adragna

A variable frequency version of flyback converter, commonly known as Quasi-resonant (QR) ZVS flyback, is largely used in certain applications, such as SMPS for TV, though it is well suited for other applications too.

This peculiar topology features several merits. Besides the others, which will be highlighted in the text, one of them is to be a simple derivative of the standard square-wave flyback, well known to every SMPS designer.

After deriving the equations governing QR ZVS flyback topology and dealing with the related issues, ST's L6565, a PWM controller specifically designed to fit this particular topology, will be presented and its internal functions discussed in details.

Some clues on the design based on this device will be provided and, finally, a design example will be given that will show how easy and cost-effective such L6565-based systems are.

INTRODUCTION

Over the past two decades plenty of resonant and quasi-resonant converters have been developed and proposed as an answer to the difficulties raised by square-wave converters, especially those related to their parasitic elements. The basic idea is to put these parasitics in use.

The core of both classes of converters is a tank circuit. Unlike resonant converters, where it takes part actively in the power conversion process, quasi-resonant converters use the tank circuit only to create either a zero-voltage or a zero-current condition for the power switch, to turn on or turn off respectively.

The existing types of quasi-resonant converters can be then classified as either Zero-Voltage Switching turn-on (ZVS) or Zero-Current Switching turn-off (ZCS) converters.

In ZVS converters the power switch is dynamically connected in parallel to the tank circuit. The superposition of the resonant voltage across the tank circuit (and the switch) on the DC input voltage generates the zero-voltage condition for the switch to turn on. Conversely, in ZCS converters the power switch is connected in series to the tank circuit. The superposition of the resonant current flowing through the tank circuit (and the switch, while it is in on state) on the normal current flow generates the zero-current condition for the switch to turn off.

An interesting property of quasi-resonant converters is that they will be turned back into a normal square-wave converter if the tank circuit is removed. Vice versa, a quasi-resonant converter can be obtained starting from a normal square-wave topology.

QR ZVS FLYBACK TOPOLOGY

In principle there are many ways to make a quasi-resonant (QR) ZVS flyback converter, but most of them are not suitable for offline applications because of the too high voltages involved. With the above-mentioned property in mind it is possible to derive a QR version starting from a standard square-wave flyback power stage and pointing out its major parasitic elements, as illustrated in figure 1.

L_m is the magnetic inductance, which represents the magnetic flux generated by the primary winding and not coupled to the secondary. It stores energy that will not be delivered to the secondary and that needs to be transferred or dissipated elsewhere. Besides, it prevents a portion of the energy stored in the mutual inductance (L_m + L_k) is the leakage inductance, which represents the energy that will not be delivered to the secondary and delays the energy transfer process. The energy stored in L_k is the cause of the large overvoltage spike on the MOSFET's drain at turn-off.

flyback2 - SaberRD

File | Home | Model | Simulate | Analyze | View

Experiment | full_load_efficiency | Location | Local | No Looping

100 % | Batch | Workspace...

Quick Simulation

Results

conducted_EMI

TR

Common Mode Noise - Vac = 175V | Common Mode Noise - Vac = 268V | full_load_efficiency | l6565_2.ai_sch (/controller) | flyback2.ai_sch (/)

L6565-based 50W QR Flyback (ST AN1326)

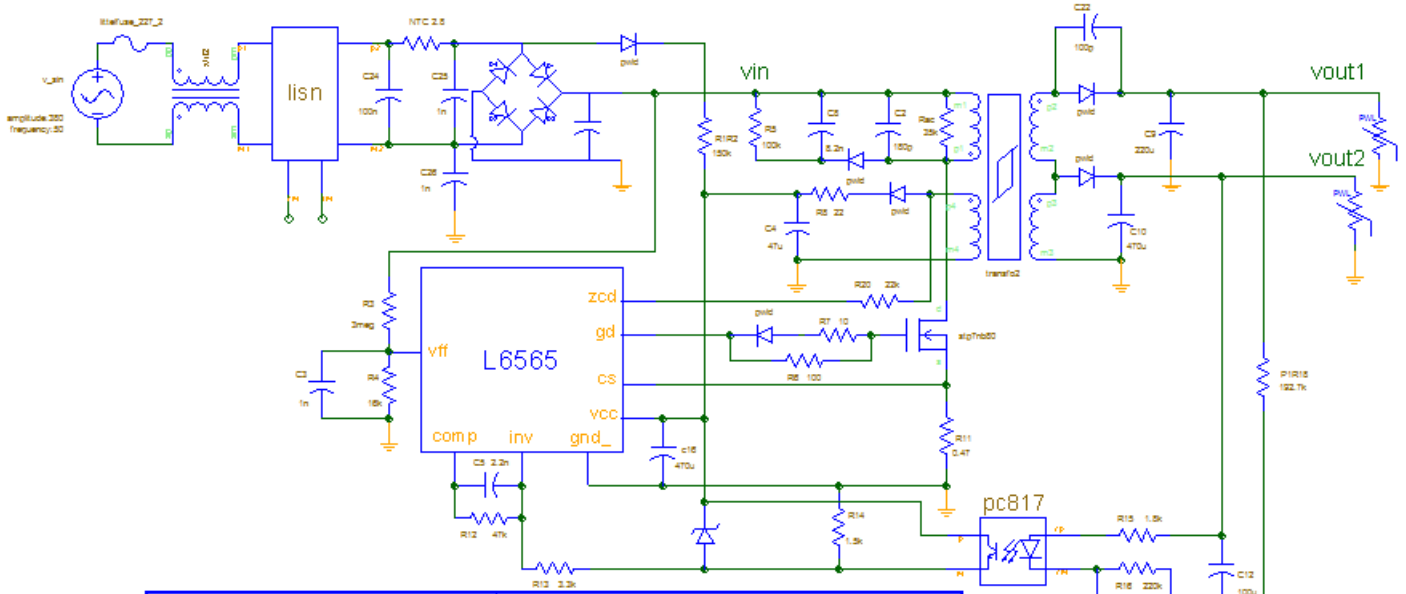

Fidelity Levels	At this level, a detailed model of the power MOSFET is used that includes the nonlinearity of the output capacitance Coss. The transformer model includes the eddy current losses produced in both the windings and the nonlinear hysteretic core. These influence the period and attenuation of the oscillations of the resonant tank. An AC resistance (35k Ohm) is added across the primary to account for the extra losses due to the air gap fringing field. Thank you to Claudio ADRAGNA and Giovanni GRITTI from ST Microelectronics for their constructive feedback.
flyback1:ideal models	
flyback2:higher fidelity	

SaberRD

SaberRD>

Properties

Attributes

Experiments | Faults

Libraries | Results | Simulator | Netlist | SaberRD | Job Monitor

flyback2

4.55", 1.12" | 100%

flyback2 - SaberRD

File | Home | Model | Simulate | Analyze | View

Experiment | 100 % | conducted_EMI | Location: Local | Batch | Workspace... | No Looping

conducted_EMI
full_load_efficiency
half_load_efficiency
load_short_circuit_fault
standby_efficiency
New ...

Quick Simulation

Results | conducted_EMI | TR

Vac = 175V | Common Mode Noise - Vac = 268V | full_load_efficiency | l6565_2.ai_sch (/controller) | flyback2.ai_sch (/)

L6565-based 50W QR Flyback (ST AN1326)

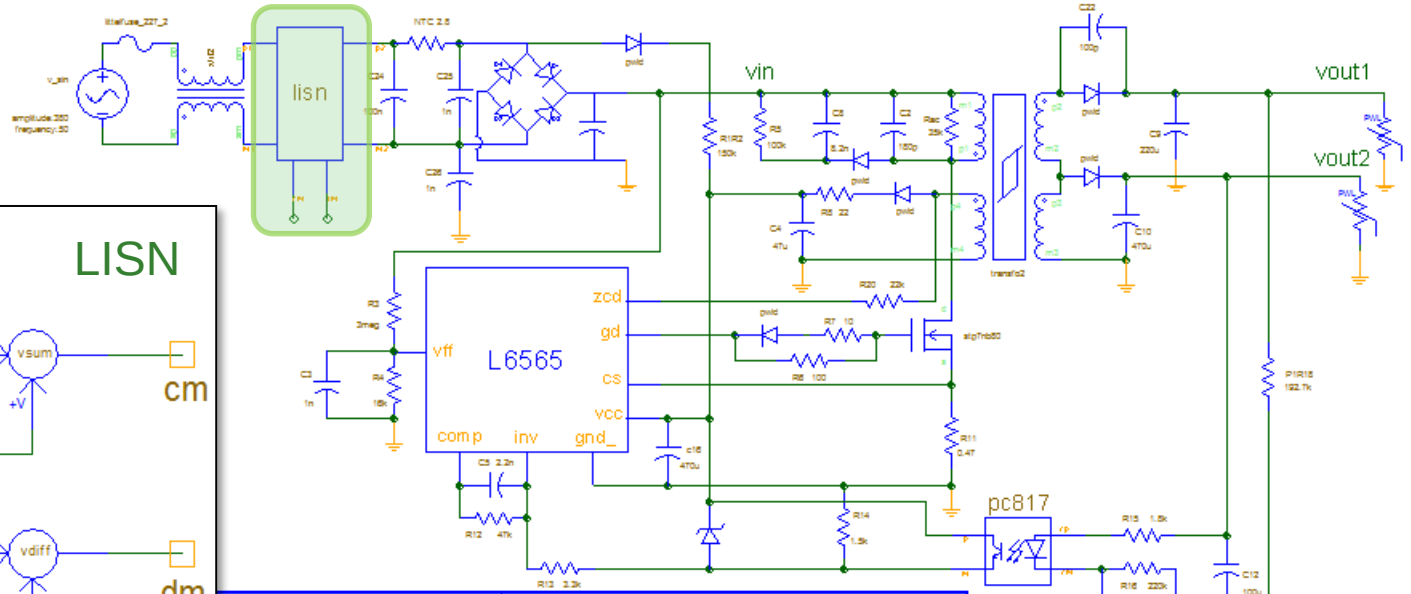

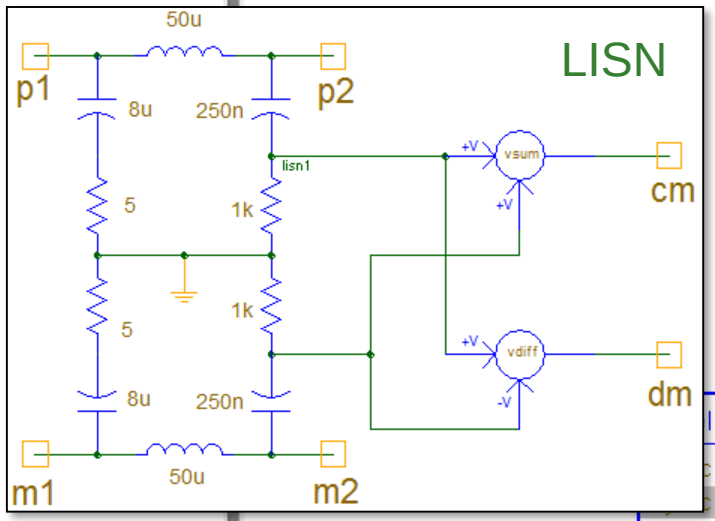

lity Levels
k1:ideal models
k2:higher fidelity

At this level, a detailed model of the power MOSFET is used that includes the nonlinearity of the output capacitance Coss. The transformer model includes the eddy current losses produced in both the windings and the nonlinear hysteretic core. These influence the period and attenuation of the oscillations of the resonant tank. An AC resistance (35k Ohm) is added across the primary to account for the extra losses due to the air gap fringing field.
Thank you to Claudio ADRAGNA and Giovanni GRITTI from ST Microelectronics for their constructive feedback.

Properties | Attributes | Experiments | Faults

SaberRD

SaberRD>

Libraries | Results | Simulator | Netlist | SaberRD | Job Monitor

flyback2 | -0.74", 3.40" | 100%

flyback2 - SaberRD

File Home Model Simulate Analyze View

Experiment | conducted_EMI | Location | Local | No Looping

100 % | Batch | Workspace...

Quick Simulation

Results

conducted_EMI

TR

conducted_EMI | Common Mode Noise - Vac = 70V | Common Mode Noise - Vac = 175V | Common Mode Noise - Vac = 268V | full_load_efficiency

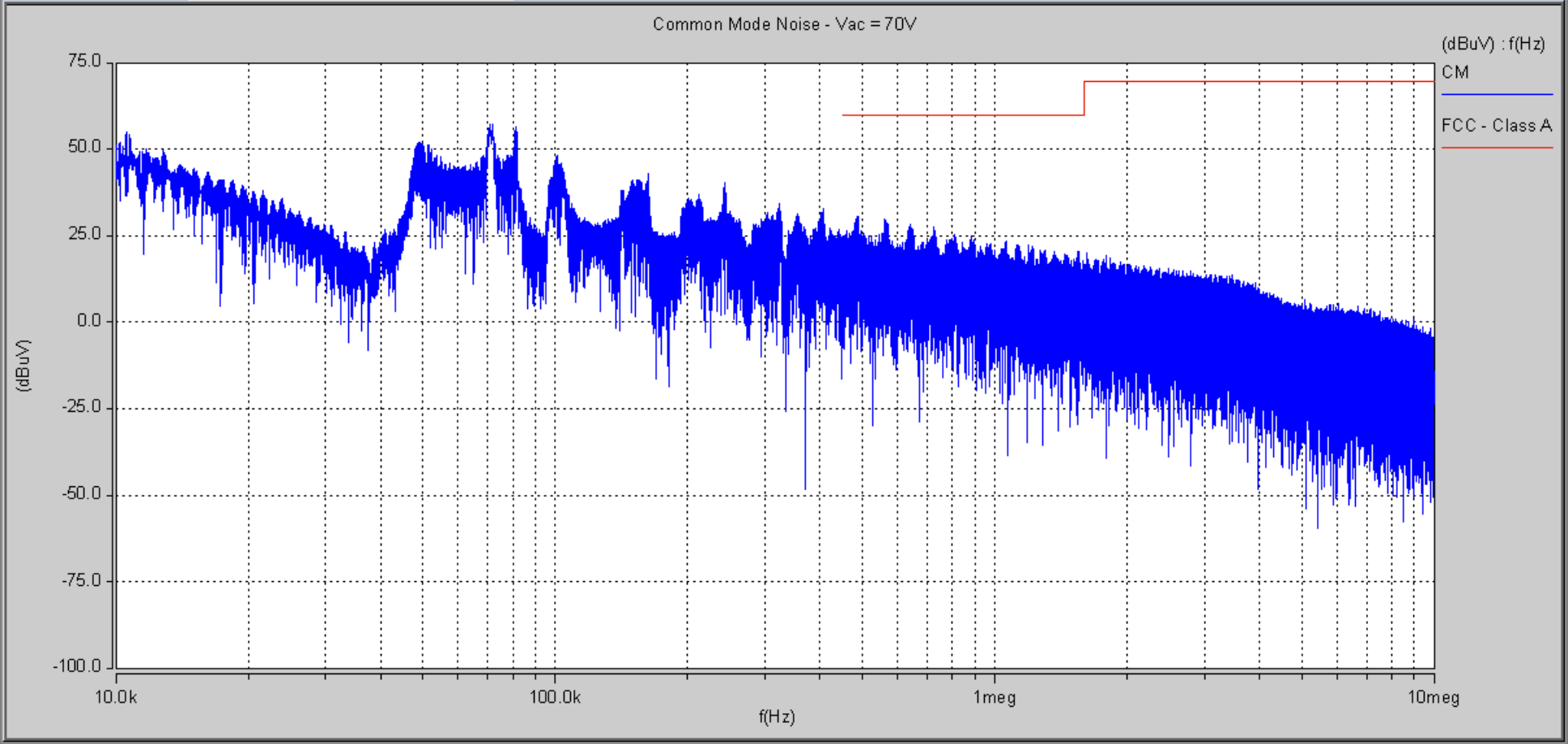

SaberRD

SaberRD>

Libraries | Results | Simulator | Netlist | SaberRD | Job Monitor

Properties

Graph

Properties

Attributes

Experiments

Faults

flyback2

4.71", 3.53"

100%

flyback2 - SaberRD

File | Home | Model | Simulate | Analyze | View

Experiment | conducted_EMI | Location | Local | No Looping

100 % | Batch | Workspace...

Quick Simulation

Results

conducted_EMI

TR

conducted_EMI | Common Mode Noise - Vac = 70V | **Common Mode Noise - Vac = 175V** | Common Mode Noise - Vac = 268V | full_load_efficiency

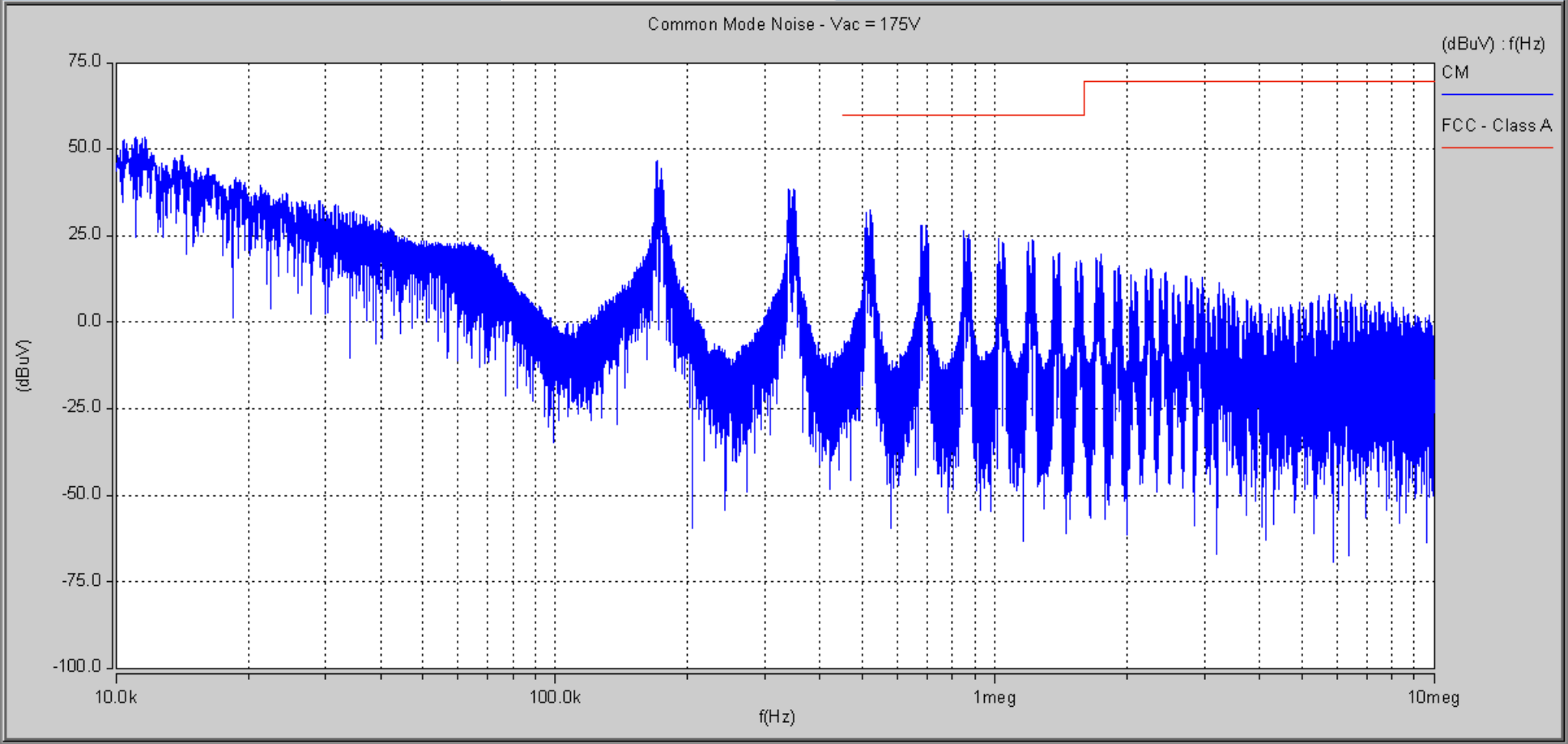

SaberRD

SaberRD>

Libraries | Results | Simulator | Netlist | SaberRD | Job Monitor

Properties

Graph

Properties

Attributes

Experiments

Faults

flyback2

4.71", 3.53" | 100%

flyback2 - SaberRD

File | Home | Model | Simulate | Analyze | View

Experiment | conducted_EMI | Location | Local | No Looping

100 % | Batch | Workspace...

Quick Simulation

Results

conducted_EMI

TR

conducted_EMI | Common Mode Noise - Vac = 70V | Common Mode Noise - Vac = 175V | Common Mode Noise - Vac = 268V | full_load_efficiency

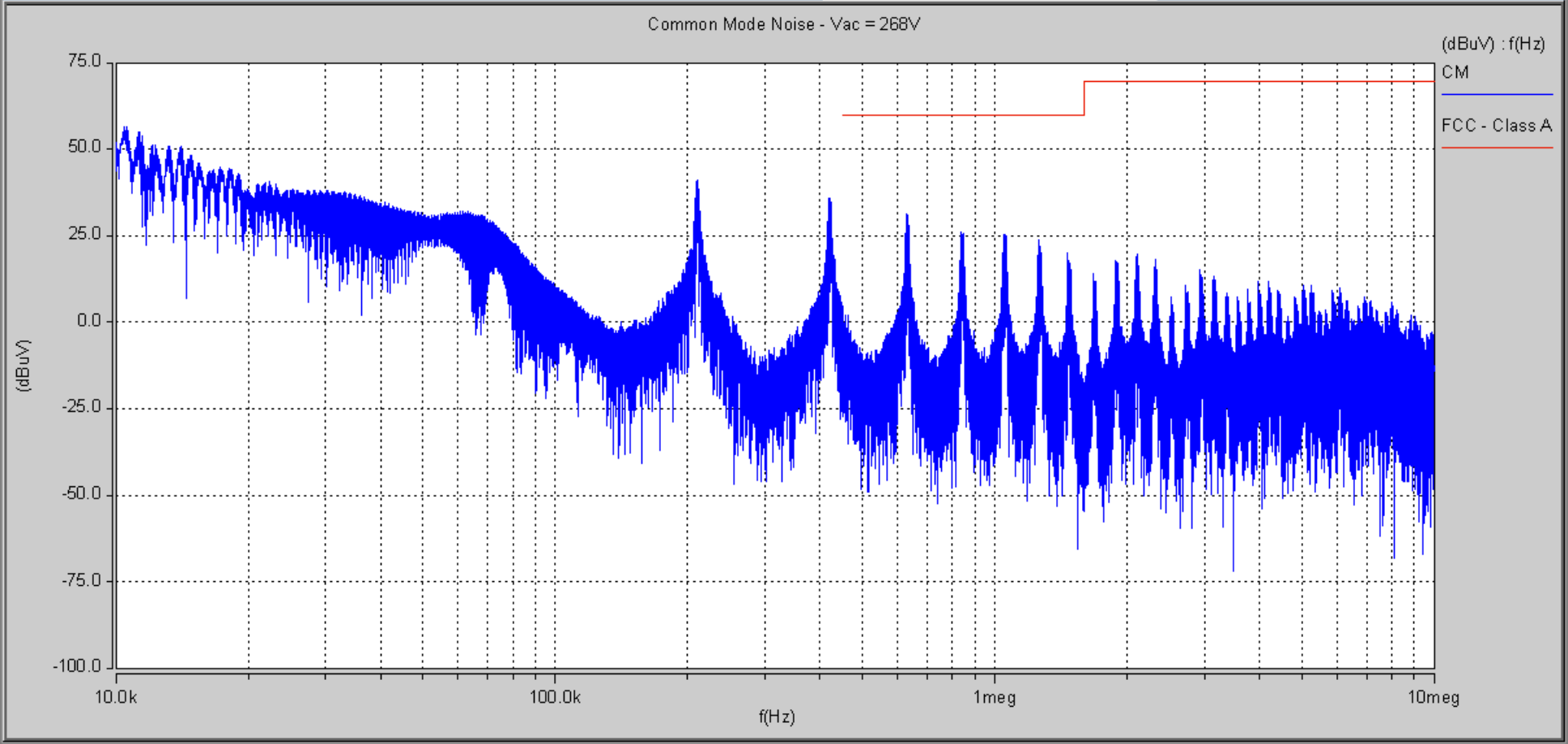

SaberRD

SaberRD>

Libraries | Results | Simulator | Netlist | SaberRD | Job Monitor

Properties

Graph

Properties

Attributes

Experiments

Faults

flyback2

4.71", 3.53"

100%

flyback2 - SaberRD

Experiment

Operating Point | DC Vary | Parametric Sweep | Fault | Define Graph | Test | Set/Calculate | AIM Code
Transient | Alter | Monte Carlo | Plot Signal | Read Waveform
Small Signal | Pole-Zero | Sensitivity | Measure | Export Waveform

Experiment Editor Basic Tasks

Results

conducted_EMI

TR

conducted_EMI | Common Mode Noise - Vac = 70V | Common Mode Noise - Vac = 175V | Common Mode Noise - Vac = 268V | full_load_efficiency

```
tr_emi = [tr -tend 50m -tstep 0.05u -progress 500 -siglist :flyback2:cm -terror 1u -density 100]
cm = [wf:read -pfile tr_emi -signal :flyback2:cm]
TR = [graph -title "Common Mode Noise Comparison"]
    sig1 = [graph:plot -wf cm -label "CM_QR"]
fft = [aim -code "wf:fft $$cm -npoints 1048576 -xbegin 10m -xend 50m"]
aim -code "source plotFFT.aim; PlotFFT $$fft"
```

SaberRD

```
SaberRD>
```

Libraries | Results | Simulator | Netlist | SaberRD | Job Monitor

Properties

Experiment

Properties

Meta

Identifier	conducted_
Display Name	conducted_
Category	
Description	

Identifier
Identifier of the task definition.

Attributes

Misc

Identifier	id
Type	string
List	No
Required	No

Identifier
Identifier of the property to use as variable in expressions.

Experiments | Faults

flyback2 | 4.71", 3.53" | 100%

flyback2 - SaberRD

Experiment

File | Home | Model | Simulate | Analyze | View | Create

Operating Point | DC Vary | Parametric Sweep | Fault | Define Graph | Test | Set/Calculate | AIM Code
Transient | Alter | Monte Carlo | Plot Signal | Read Waveform
Small Signal | Pole-Zero | Sensitivity | Measure | Export Waveform

Analyses | Iterative Tasks | Graph and Measures | Miscellaneous

Results

conducted_EMI

TR

Common Mode Noise - Vac = 175V | Common Mode Noise - Vac = 268V | full_load_efficiency | l6565_2.ai_sch (/controller) | flyback2.ai_sch (/)

```
aim -code "Saber:Send {alter :flyback2:pwlr.load1:pwl [0,1k,1m,1k,2m,300]}"
aim -code "Saber:Send {alter :flyback2:pwlr.load2:pwl [0,1k,1m,1k,2m,14]}"
tend = 70m
freq = 50
vary -param :flyback2:v_sin.v_sin1:amplitude -type list -vlist {85 90 95 100 110 120 135 150 175 200 225 250 275 300 325 350 375 400} -queue "MultiCore" -parallel 3
tr0 = [tr -tend tend-1.25/freq -tstep 0.01u -trep "tr0" -terror 0.1u -density 100 -tniter 10]
tr1 = [tr -tend tend -tstep 0.01u -siglist :*:* :flyback2:v_sin.v_sin1:i :flyback2:r.ntc:pwrd :flyback2:r.rac:pwrd :flyback2:bridge_diode_fw_1ph.bridge_diode_fw_1ph1:pwrd :flyback2:pwld.d1:v :flyback2:pwld.d1:i :flyback2:
pwrd_in = [wf:read -pfile tr1 -signal :flyback2:v_sin.v_sin1:power]
energy_in = integ(pwrd_in)
meas1 = [atx -xvalue tend-1/freq -wf energy_in]
meas2 = [atx -xvalue tend -wf energy_in]
power_in = (meas1-meas2)*freq
aim -code "pf:close $$energy_in"
pwrd_load1 = [wf:read -pfile tr1 -signal :flyback2:pwlr.load1:power]
pwrd_load2 = [wf:read -pfile tr1 -signal :flyback2:pwlr.load2:power]
energy_out = integ(pwrd_load1+pwrd_load2)
meas1 = [atx -xvalue tend-1/freq -wf energy_out]
meas2 = [atx -xvalue tend -wf energy_out]
power_out = (meas2-meas1)*freq
aim -code "pf:close $$energy_out"
efficiency = power_out / power_in
pf1 = [pf:append -wfname "efficiency" -value efficiency]
v_d1 = [wf:read -pfile tr1 -signal :flyback2:pwld.d1:v]
i_d1 = [wf:read -pfile tr1 -signal :flyback2:pwld.d1:i]
energy_d1 = integ(v_d1*i_d1)
meas1 = [atx -xvalue {tend - 1 / freq} -wf energy_d1]
meas2 = [atx -xvalue tend -wf energy_d1]
power_D1 = (meas2 - meas1) * freq
aim -code "pf:close $$energy_d1"
v_d2 = [wf:read -pfile tr1 -signal :flyback2:pwld.d2:v]
i_d2 = [wf:read -pfile tr1 -signal :flyback2:pwld.d2:i]
```

SaberRD

```
SaberRD>
```

Experiments

- conducted_EMI
- full_load_efficiency
- half_load_efficiency
- load_short_circuit_fault
- standby_efficiency

Libraries | Results | Simulator | Netlist | SaberRD | Job Monitor

flyback2 | -5.28", 3.54" | 100%

flyback2 - SaberRD

Experiment

File | Home | Model | Simulate | Analyze | View | Create

Operating Point | DC Vary | Parametric Sweep | Fault | Define Graph | Test | Set/Calculate | AIM Code
Transient | Alter | Monte Carlo | Plot Signal | Read Waveform
Small Signal | Pole-Zero | Sensitivity | Measure | Export Waveform

Analyses | Iterative Tasks | Graph and Measures | Miscellaneous

Results

conducted_EMI

TR

Common Mode Noise - Vac = 175V | Common Mode Noise - Vac = 268V | full_load_efficiency* | l6565_2.ai_sch (/controller) | flyback2.ai_sch (/)

```
aim -code "Saber:Send {alter :flyback2:pwlr.load1:pwl [0,1k,1m,1k,2m,300]}"
aim -code "Saber:Send {alter :flyback2:pwlr.load2:pwl [0,1k,1m,1k,2m,14]}"
tend = 70m
freq = 50
vary -param :flyback2:v_sin.v_sin1:amplitude -type list -vlist {85 90 95 100 110 120 135 150 175 200 225 250 275 300 325 350 375 400} -queue "MultiCore"
tr0 = [tr -tend tend-1.25/freq -tstep 0.01u -trep "tr0" -terror 0.1u -density 100 -tniter 10]
tr1 = [tr -tend tend -tstep 0.01u -siglist :*:* :flyback2:v_sin.v_sin1:i :flyback2:r.ntc:pwrd :flyback2:r.rac:pwrd :flyback2:bridge_diode_fw_1ph.bridge_diode_fw_1ph1:pwrd :flyback2:pwld.d1:v :flyback2:pwld.d1:i :flyb
pwrd_in = [wf:read -pfile tr1 -signal :flyback2:v_sin.v_sin1:power]
energy_in = integ(pwrd_in)
meas1 = [atx -xvalue tend-1/freq -wf energy_in]
meas2 = [atx -xvalue tend -wf energy_in]
power_in = (meas1-meas2)*freq
aim -code "pf:close $$energy_in"
pwrd_load1 = [wf:read -pfile tr1 -signal :flyback2:pwlr.load1:power]
pwrd_load2 = [wf:read -pfile tr1 -signal :flyback2:pwlr.load2:power]
energy_out = integ(pwrd_load1+pwrd_load2)
meas1 = [atx -xvalue tend-1/freq -wf energy_out]
meas2 = [atx -xvalue tend -wf energy_out]
power_out = (meas2-meas1)*freq
aim -code "pf:close $$energy_out"
efficiency = power_out / power_in
pf1 = [pf:append -wfname "efficiency" -value efficiency]
v_d1 = [wf:read -pfile tr1 -signal :flyback2:pwld.d1:v]
i_d1 = [wf:read -pfile tr1 -signal :flyback2:pwld.d1:i]
energy_d1 = integ(v_d1*i_d1)
meas1 = [atx -xvalue {tend - 1 / freq} -wf energy_d1]
meas2 = [atx -xvalue tend -wf energy_d1]
power_D1 = (meas2 - meas1) * freq
aim -code "pf:close $$energy_d1"
v_d2 = [wf:read -pfile tr1 -signal :flyback2:pwld.d2:v]
i_d2 = [wf:read -pfile tr1 -signal :flyback2:pwld.d2:i]
```

SaberRD

SaberRD>

Libraries | Results | Simulator | Netlist | SaberRD | Job Monitor

Properties

Parameter Sweep

Properties

Loop Settings	
Parameter Name	:flyback2:v_sin.v_sin1
Loop Type Settings	
Sweep Type	**List of Values**
Sweep Start Value	
Sweep End Value	
Number of Points	
Increment Type	Linear
Sweep Step	
List of Values	85 90 95 100 110 120
Parallel Simulation Settings	
Loops	**MultiCore**
Parallel Runs	4
Time Out	No

Parallel Runs
Number of SaberHDL processes to run in parallel (Select "Sequential" in the "Loops" p...

Attributes

Misc	
Identifier	parallel
Type	integer
List	No
Required	No
Modifier	Expression

Identifier
Identifier of the property to use as variable in expressions.

Parallel Computing

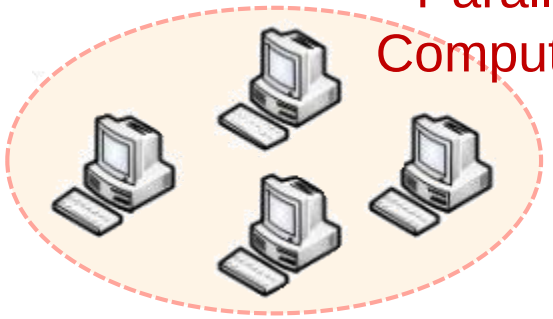

flyback2 | -5.28", 3.54" | 100%

flyback2 - SaberRD

File | Home | Model | Simulate | Analyze | View

Clipboard: Paste, Cut, Copy
Font: All Types, Arial, 4
Paragraph: Anchor
Appearance
Drawing: Annotate
Connection: Wire, Bus, Bundle
Editing: Find/Select

Results

full_load_efficiency

- Experiment Report
- graph_efficiency

full_load_efficiency | I6565_2.ai_sch (/controller) | flyback2.ai_sch (/) | Efficiency vs. Vac | full_load_efficiency.ai_exptlog

Task Label	Task Definition	Description	Task Result	Task Status
vary	vary -param :flyback2:v_sin.v_sin1:amplit...		0 Failed	Complete
:flyback2:v_sin.v_sin1:amplitude=85				Complete
:flyback2:v_sin.v_sin1:amplitude=90				Complete
:flyback2:v_sin.v_sin1:amplitude=95				Complete
:flyback2:v_sin.v_sin1:amplitude=100				Complete
:flyback2:v_sin.v_sin1:amplitude=110				Complete
:flyback2:v_sin.v_sin1:amplitude=120				Complete
:flyback2:v_sin.v_sin1:amplitude=135				Complete
:flyback2:v_sin.v_sin1:amplitude=150				Complete
:flyback2:v_sin.v_sin1:amplitude=175				Complete
:flyback2:v_sin.v_sin1:amplitude=200				Complete
:flyback2:v_sin.v_sin1:amplitude=225				Complete
:flyback2:v_sin.v_sin1:amplitude=250				Complete
power_in	power_in = (meas1-meas2)*freq		59.148834385357	Complete
power_out	power_out = (meas2-meas1)*freq		50.741302914046	Complete
efficiency	efficiency = power_out / power_in		0.85785803627954	Complete
power_D1	power_D1 = (meas2 - meas1) * freq		529.89958002559u	Complete
power_D2	power_D2 = (meas2 - meas1) * freq		0.0046144818525563	Complete
power_D3	power_D3 = (meas2 - meas1) * freq		0.085040857819633	Complete
power_D4	power_D4 = (meas2 - meas1) * freq		0.005311669298956	Complete
power_D5	power_D5 = (meas2 - meas1) * freq		0.27213384087585	Complete
power_D6	power_D6 = (meas2 - meas1) * freq		0.7007897531622	Complete
power_core	power_core = (meas2 - meas1) * freq		0.86567921678666	Complete
power_windings	power_windings = (meas2 - meas1) * freq		2.0950933405528	Complete
power_mosfet	power_mosfet = (meas2 - meas1) * freq		0.99591069784918	Complete
power_NTC	power_NTC = (meas2 - meas1) * freq		1.1834368375253	Complete
power_TL431	power_TL431 = (meas2 - meas1) * freq		0.014027905695981	Complete
power_R1R2	power_R1R2 = (meas2 - meas1) * freq		0.12766021661017	Complete
power_R3	power_R3 = (meas2 - meas1) * freq		0.018664532236952	Complete
power_R4	power_R4 = (meas2 - meas1) * freq		99.544170379866u	Complete

Simulator

```
NOTE: Restored :flyback2:v_sin.v_sin1:amplitude to its original initial value expression/association.
> Task:ClosePfiles
>
>
```

Properties: No Element Selected

Attributes

Libraries | Results | Simulator | Netlist | SaberRD | Job Monitor

flyback2 | 1.32", 3.54" | 100%

flyback2 - SaberRD

File | Home | Model | Simulate | Analyze | View

Results

full_load_efficiency

- Experiment Report
- graph_efficiency

full_load_efficiency | l6565_2.ai_sch (/controller) | flyback2.ai_sch (/) | Efficiency vs. Vac | full_load_efficiency.ai_exptlog

Task Label	Task Definition	Description	Task Result	Task Status
vary	vary -param :flyback2:v_sin.v_sin1:amplit...		0 Failed	Complete
:flyback2:v_sin.v_sin1:amplitude=85				Complete
:flyback2:v_sin.v_sin1:amplitude=90				Complete
:flyback2:v_sin.v_sin1:amplitude=95				Complete
:flyback2:v_sin.v_sin1:amplitude=100				Complete
:flyback2:v_sin.v_sin1:amplitude=110				Complete
:flyback2:v_sin.v_sin1:amplitude=120				Complete
:flyback2:v_sin.v_sin1:amplitude=135				Complete
:flyback2:v_sin.v_sin1:amplitude=150				Complete
:flyback2:v_sin.v_sin1:amplitude=175				Complete
:flyback2:v_sin.v_sin1:amplitude=200				Complete
:flyback2:v_sin.v_sin1:amplitude=225				Complete
:flyback2:v_sin.v_sin1:amplitude=250				Complete
power_in	power_in = (meas1-meas2)*freq		59.148834385357	Complete
power_out	power_out = (meas2-meas1)*freq		50.741302914046	Complete
efficiency	efficiency = power_out / power_in		0.85785803627954	Complete
power_D1	power_D1 = (meas2 - meas1) * freq		529.89958002559u	Complete
power_D2	power_D2 = (meas2 - meas1) * freq		0.0046144818525563	Complete
power_D3	power_D3 = (meas2 - meas1) * freq		0.085040857819633	
power_D4	power_D4 = (meas2 - meas1) * freq		0.005311669298956	
power_D5	power_D5 = (meas2 - meas1) * freq		0.27213384087585	
power_D6	power_D6 = (meas2 - meas1) * freq		0.7007897531622	
power_core	power_core = (meas2 - meas1) * freq		0.86567921678666	Complete
power_windings	power_windings = (meas2 - meas1) * freq		2.0950933405528	Complete
power_mosfet	power_mosfet = (meas2 - meas1) * freq		0.99591069784918	Complete
power_NTC	power_NTC = (meas2 - meas1) * freq		1.1834368375253	Complete
power_TL431	power_TL431 = (meas2 - meas1) * freq		0.014027905695981	Complete
power_R1R2	power_R1R2 = (meas2 - meas1) * freq		0.12766021661017	Complete
power_R3	power_R3 = (meas2 - meas1) * freq		0.018664532236952	Complete
power_R4	power_R4 = (meas2 - meas1) * freq		99.544170379866u	Complete

Most dissipative components

Simulator

```
NOTE: Restored :flyback2:v_sin.v_sin1:amplitude to its original initial value expression/association.
> Task:ClosePfiles
>
>
```

Properties

No Element Selected

Attributes

Libraries | Results | Simulator | Netlist | SaberRD | Job Monitor

flyback2 | 1.32", 3.54" | 100%

flyback2 - SaberRD

File | Home | Model | Simulate | Analyze | View

Experiment | full_load_efficiency | Location | Local | No Looping

100 % | Batch | Workspace...

Quick Simulation

Results

full_load_efficiency

- Experiment Report
- graph_efficiency

Common Mode Noise - Vac = 268V | full_load_efficiency | l6565_2.ai_sch (/controller) | flyback2.ai_sch (/) | Efficiency vs. Vac

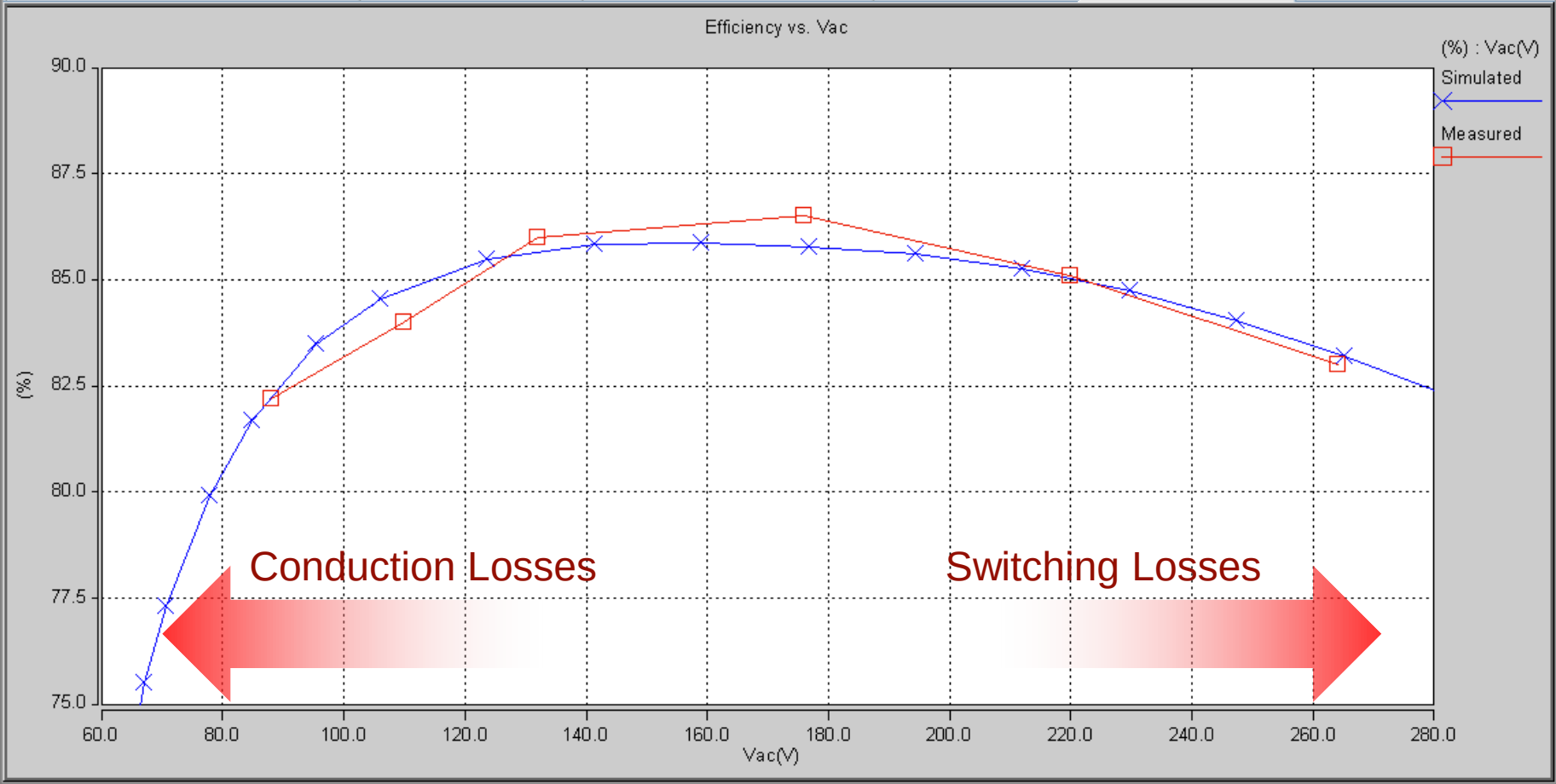

Properties

Graph

Properties

Attributes

Experiments

Faults

Simulator

```
NOTE: Restored :flyback2:v_sin.v_sin1:amplitude to its original initial value expression/association.
> Task:ClosePfiles
>

>
```

Libraries | Results | Simulator | Netlist | SaberRD | Job Monitor

flyback2 | -5.28", 3.54" | 100%

flyback2 - SaberRD

File | Home | Model | Simulate | Analyze | View

Experiment | full_load_efficiency | Location: Local | No Looping | 100 % | Batch | Workspace...

Quick Simulation

Results

full_load_efficiency

- Experiment Report
- graph_efficiency

Common Mode Noise - Vac = 268V | full_load_efficiency | l6565_2.ai_sch (/controller) | flyback2.ai_sch (/) | Efficiency vs. Vac

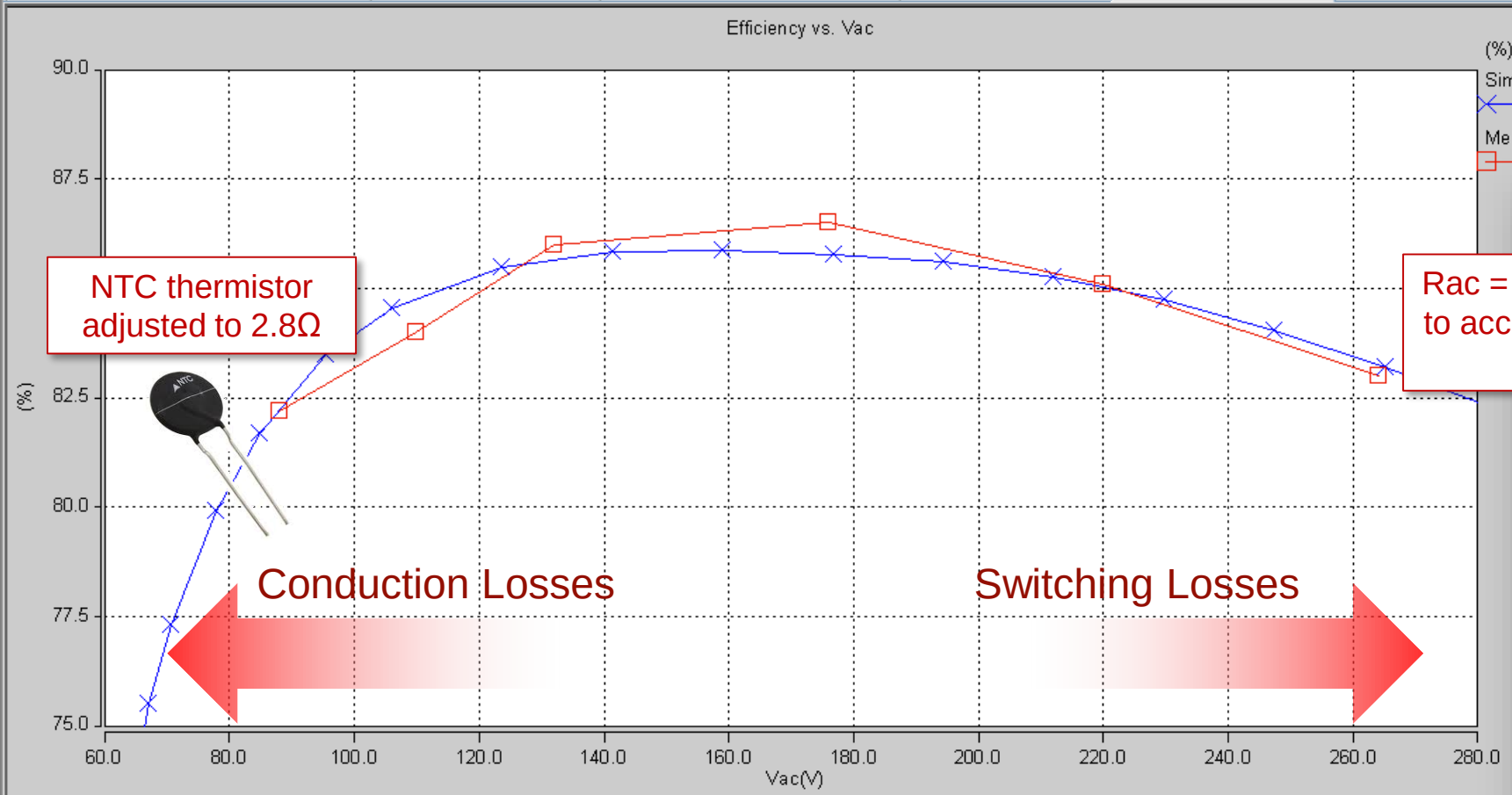

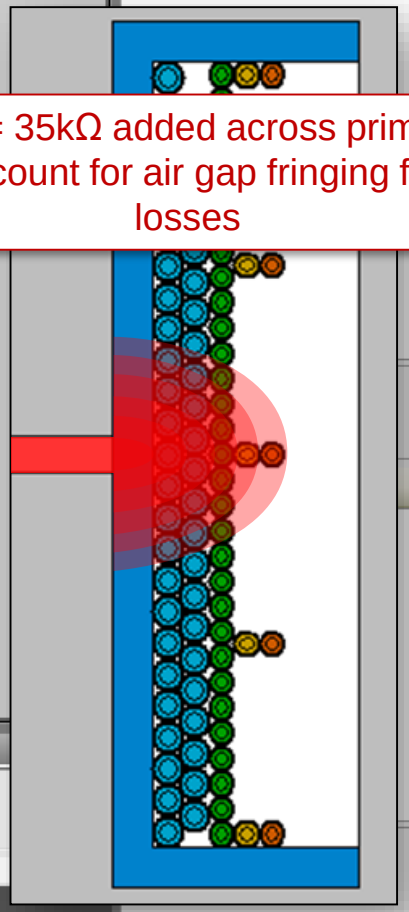

Properties

Graph

Properties

Simulator

```
NOTE: Restored :flyback2:v_sin.v_sin1:amplitude to its original initial value expression/association.
> Task:ClosePfiles
>

>
```

Libraries | Results | Simulator | Netlist | SaberRD | Job Monitor

flyback2 | -5.28", 3.54" | 100%

flyback2 - SaberRD

File | Home | Model | Simulate | Analyze | View

Experiment | full_load_efficiency | Location | Local | No Looping

100 % | Batch | Workspace...

Quick Simulation

Results | conducted_EMI | TR

Common Mode Noise - Vac = 175V | Common Mode Noise - Vac = 268V | full_load_efficiency | l6565_2.ai_sch (/controller) | flyback2.ai_sch (/)

L6565-based 50W QR Flyback (ST AN1326)

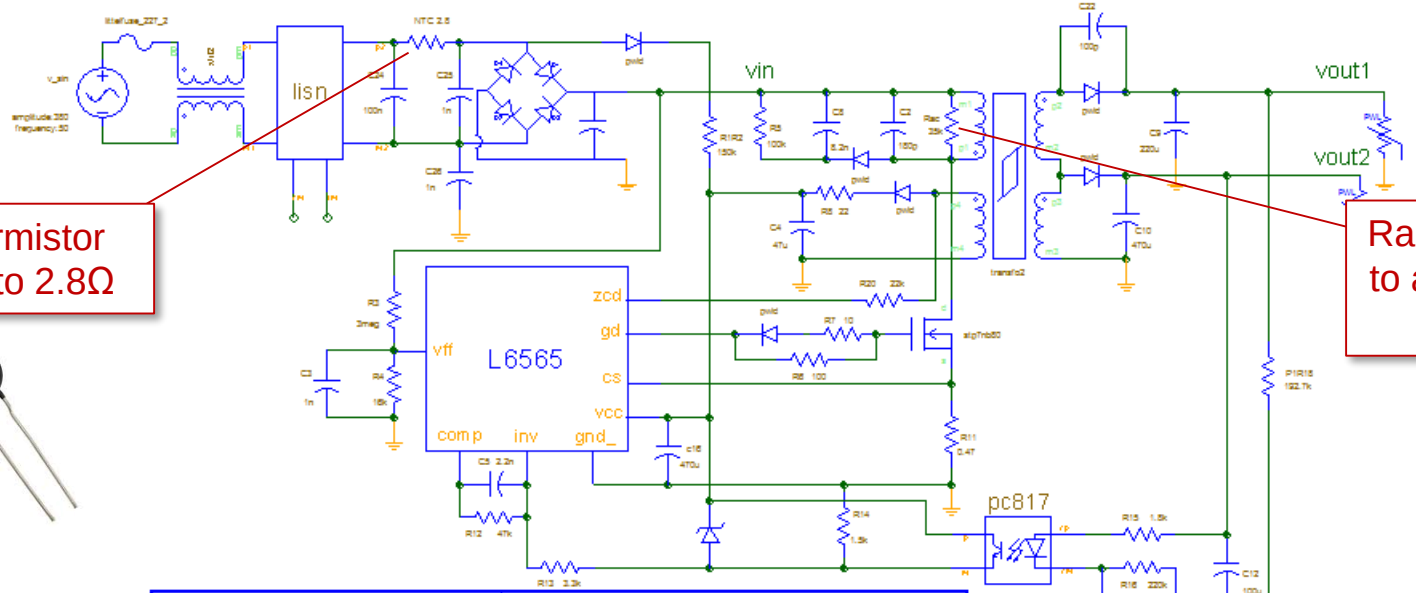

NTC thermistor adjusted to 2.8Ω

Rac = 35kΩ added across primary to account for air gap fringing field losses

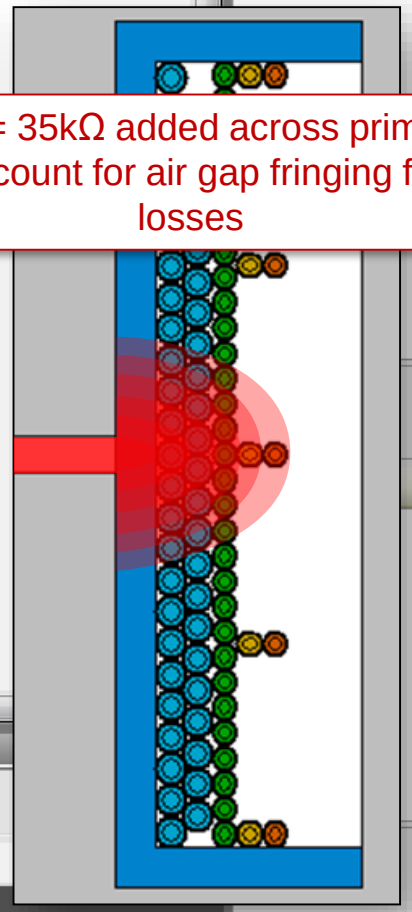

Fidelity Levels	At this level, a detailed model of the power MOSFET is used that includes the nonlinearity of the output capacitance Coss. The transformer model includes the eddy current losses produced in both the windings and the nonlinear hysteretic core. These influence the period and attenuation of the oscillations of the resonant tank. An AC resistance (35k Ohm) is added across the primary to account for the extra losses due to the air gap fringing field. Thank you to Claudio ADRAGNA and Giovanni GRITTI from ST Microelectronics for their constructive feedback.
flyback1:ideal models	
flyback2:higher fidelity	

SaberRD

SaberRD>

Libraries | Results | Simulator | Netlist | SaberRD | Job Monitor

Properties | Experiments | Faults

flyback2 | 4.55", 1.12" | 100%

Conclusion

- High fidelity models characterized from datasheets
- Automated design verification / regression testing over broad operating conditions
  - Experiment Analyzer
  - Fault Injection
  - Worst Case Analysis / Extreme Value Analysis
  - Statistical variations (Monte Carlo)
- Scalable solution
  - Capacity for large designs (network of power converters)
  - User or site (company wide) model library management
  - Distributed/grid iterative analysis (parametric Vary, Monte-Carlo, Worst-Case Analysis, Fault)

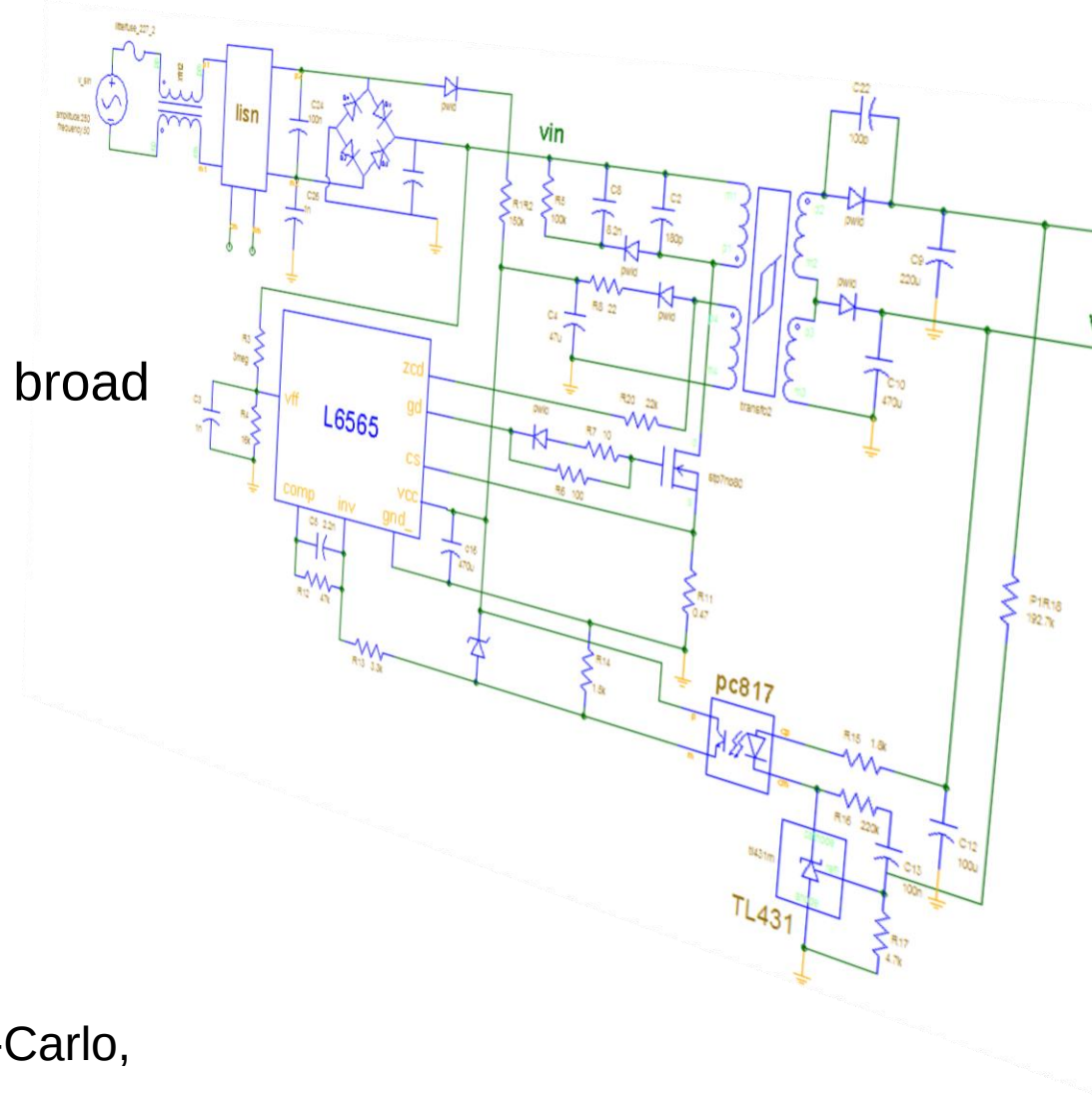

Thank You

- Flyback design available on Synopsys Forum
- Improved IGBT Tool in 2016.03

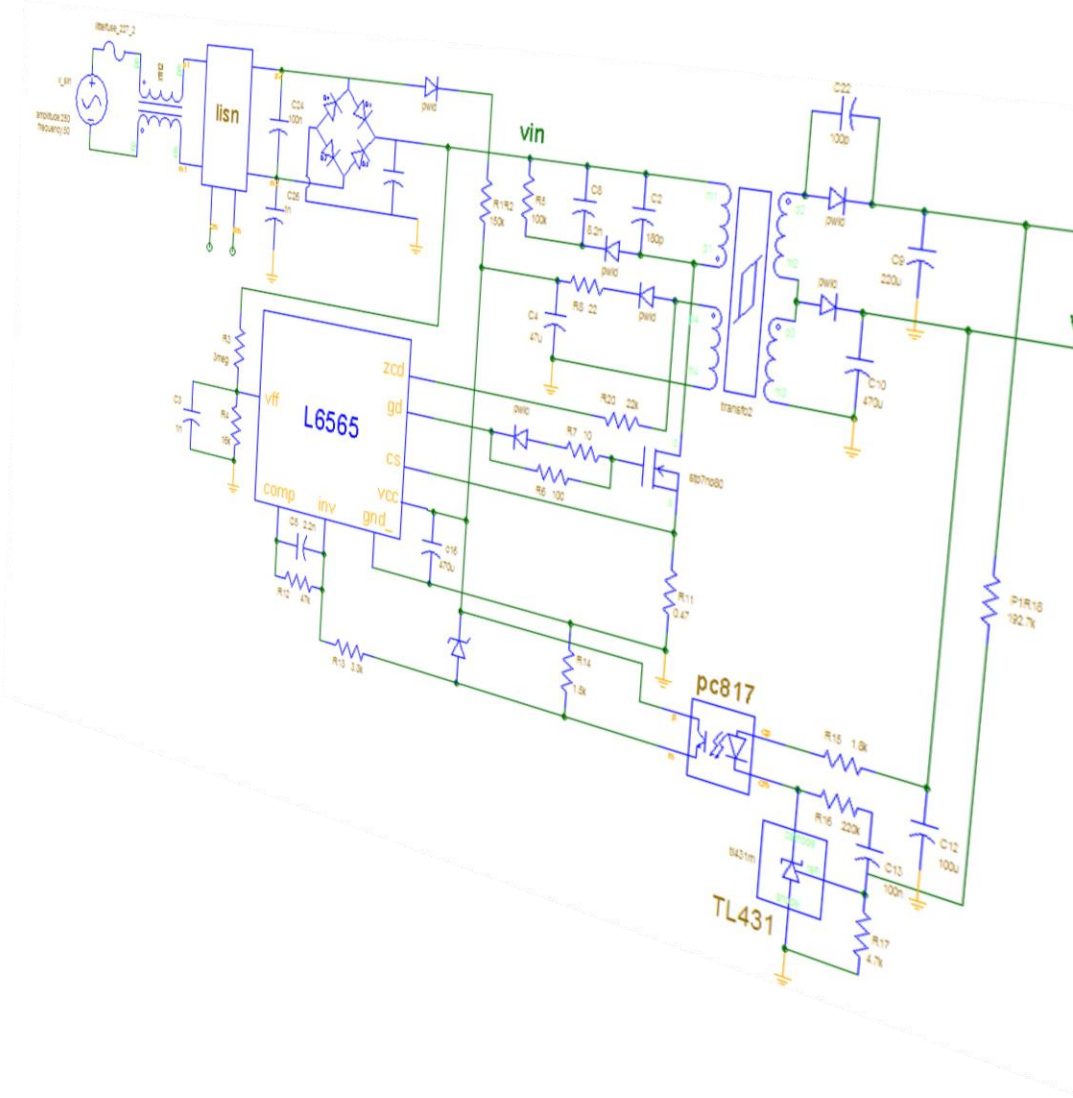

Thank you to Sophia LI, Min ZHANG and Balaji EMANDI for their contributions.

Special thanks to Claudio ADRAGNA and Giovanni GRITTI from ST for their valuable feedback.